SERVICE MANUAL

PURE POWER DC STEREO RECEIVER

SANSUI G-9700/971 G-8700DB/871DB

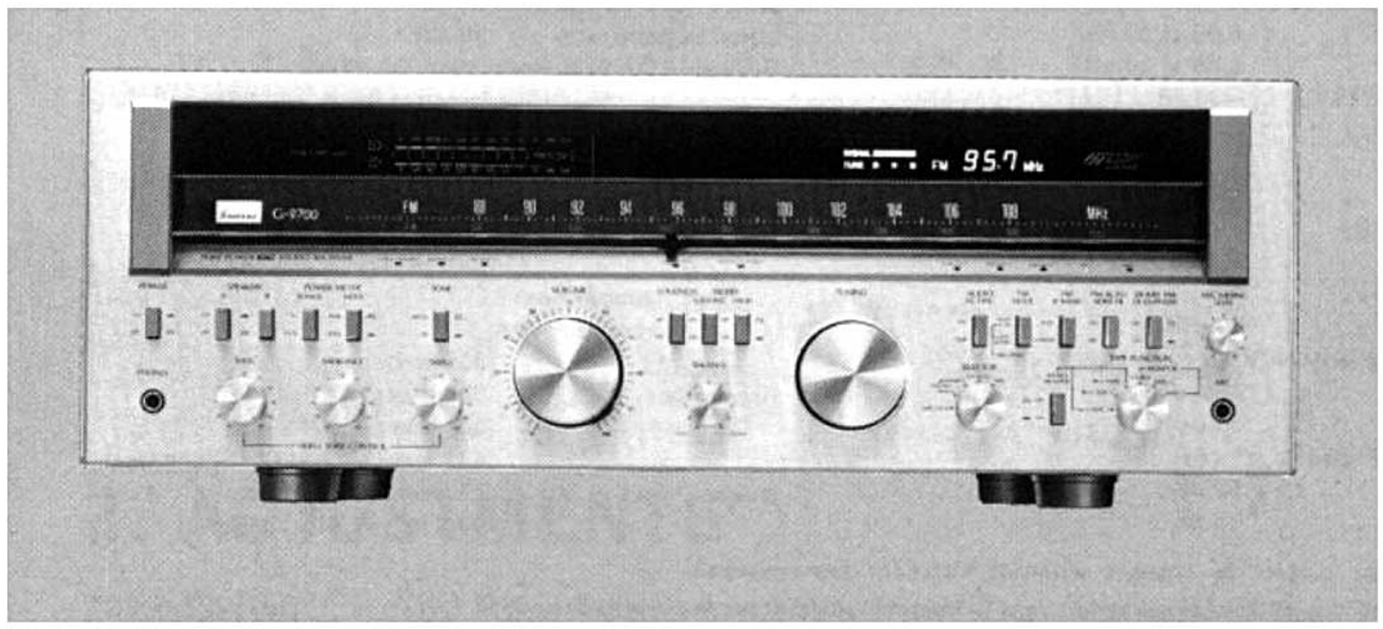

Sansui

SANSUI ELECTRIC CO., LTD.

SPECIFICATIONS

● G-9700/971

Audio section

Power output
Min. RMS, both channels driven, from 20 to 20,000 Hz with no more than 0.02 % total harmonic distortion.
200 watts per channel into 8 ohms

Load impedance . . . . 8 ohms

Total harmonic distortion
. . . . . less than 0.02 % at or below rated min. RMS power output

Intermodulation distortion (70 Hz : 7 kHz = 4:1 SMPTE method) . . . . . less than 0.02 % at rated power output

Rise time . . . . . 1.4 μsec

Slew rate . . . . . 80 V/μsec

Frequency response (at 1 watt)
Overall (from TAPE/AUX)
. . . . . 5 to 80,000 Hz +0.2 dB, −2.0 dB
Power amplifier . . . DC to 200 kHz, +0 dB, −3.0 dB

RIAA curve deviation (PHONO, 20 Hz to 20 kHz)
. . . . . +0.2 dB, −0.2 dB

Damping factor (20 Hz to 20 kHz, both channels driven)
. . . . . 60 into 8 ohms

Input sensitivity and impedance (at 1 kHz)
PHONO-1, 2 . . . . 2.5 mV/47 kilohms
(Max. input capability: 280 mV at 1 kHz, less than 0.1 % total harmonic distortion)
MIC . . . . . 6 mV/10 kilohms
TAPE-1, 2 PLAY, TAPE/AUX
. . . . . 150 mV/47 kilohms

Output level (at 1 kHz)
TAPE-1, 2 REC . . . 150 mV

Hum and noise (short-circuit, A-network)
PHONO-1, 2 . . . . 78 dB
TAPE-1, 2 PLAY, TAPE/AUX
. . . . . 95 dB

Channel separation (at 1 kHz)
PHONO-1, 2 . . . . 60 dB
TAPE-1, 2 PLAY, TAPE/AUX
. . . . . 70 dB

Controls
BASS . . . . . ±10 dB at 50 Hz
MIDRANGE . . . . ±5 dB at 1.5 kHz
TREBLE . . . . . ±10 dB at 10 kHz
SUBSONIC FILTER
. . . . . −3 dB at 16 Hz (6 dB/oct)
HIGH FILTER . . . −3 dB at 3 kHz (6 dB/oct)
LOUDNESS (VOLUME control: −30 dB position)
. . . . . 8 dB at 50 Hz
6 dB at 10 kHz
AUDIO MUTING . −20 dB

FM section

Tuning range . . . . . 88 to 108 MHz

Usable sensitivity
Mono IHF . . . . . 9.8 dBf (1.7 μV)
DIN . . . . . 1.0 μV
Stereo IHF . . . . . 17 dBf

50 dB quieting sensitivity
Mono . . . . . 12.5 dBf
Stereo . . . . . 35 dBf

Signal to noise ratio (at 65 dBf)
Mono . . . . . 82 dB
Stereo . . . . . 76 dB

Distortion (at 65 dBf)
Mono . . . . . less than 0.05 % at 100 Hz
less than 0.05 % at 1,000 Hz
less than 0.08 % at 6,000 Hz
Stereo . . . . . less than 0.1 % at 100 Hz
less than 0.07 % at 1,000 Hz
less than 0.08 % at 6,000 Hz

Alternate channel selectivity (at 400 kHz)
WIDE . . . . . 60 dB
NARROW . . . . . 80 dB

Capture ratio . . . . . 1.0 dB

Image response ratio . . 90 dB

Spurious response ratio
. . . . . 95 dB

IF response ratio . . . . 95 dB

Stereo separation . . . . 40 dB at 100 Hz
45 dB at 1,000 Hz
35 dB at 10,000 Hz
30 dB from 30 to 15,000 Hz

Frequency response . . 30 to 15,000 Hz
+0.2 dB, −1.0 dB

Antenna input impedance
. . . . . 300 ohms balanced
75 ohms unbalanced

to be continued ▶

Specifications

AM section

Tuning range . . . . . 530 to 1,600 kHz
Usable sensitivity (bar antenna)
. . . . . 50 dB/m (300 μV/m)
Selectivity . . . . . 30 dB
Signal to noise ratio . . 50 dB
Distortion (at 30 % Modulation, 80 dB/m)
. . . . . less than 0.5 %

Others

Power requirements
Power voltage . . . . 100, 120, 220, 240 V (50/60 Hz)
For U.S.A. and Canada
. . . . . 120 V (60 Hz)
Power consumption
Rated consumption
. . . . . 600 watts 750 VA
Dimensions . . . . . 560 mm (22-1/16") W
201 mm (7-15/16") H
495 mm (19-1/2") D
Weight . . . . . 22.2 kg (48.9 lbs) net
24.8 kg (54.7 lbs) packed

● G-8700DB/871DB

Audio section

Power output
Min. RMS, both channels driven, from 20 to 20,000 Hz with no more than 0.025 % total harmonic distortion.
160 watts per channel into 8 ohms
Load impedance . . . . 8 ohms
Total harmonic distortion
. . . . . less than 0.025 % at or below rated min. RMS power output
Intermodulation distortion (70 Hz : 7 kHz = 4:1 SMPTE method) . . . . . less than 0.025 % at rated power output
Rise time . . . . . 1.4 μsec
Slew rate . . . . . 76 V/μsec
Frequency response (at 1 watt)
Overall (from TAPE/AUX)
. . . . . 5 to 80,000 Hz
+0.2 dB, −2.0 dB
Power amplifier . . . DC to 200 kHz,
+0 dB, −3.0 dB
RIAA curve deviation (PHONO, 30 Hz to 20 kHz)
. . . . . +0.2 dB, −0.2 dB
Damping factor (20 Hz to 20 kHz, both channels driven)
. . . . . 60 into 8 ohms
Input sensitivity and impedance (at 1 kHz)
PHONO-1, 2 . . . . 2.5 mV/47 kilohms
(Max. input capability: 250 mV at 1 kHz, less than 0.1 % total harmonic distortion)
MIC . . . . . 6 mV/10 kilohms
TAPE-1, 2 PLAY, TAPE/AUX
. . . . . 150 mV/47 kilohms
Output level (at 1 kHz)
TAPE-1, 2 REC . . . 150 mV
Hum and noise (short-circuit, A-network)
PHONO-1, 2 . . . . 78 dB
TAPE-1, 2 PLAY, TAPE/AUX
. . . . . 95 dB
Channel separation (at 1 kHz)
PHONO-1, 2 . . . . 60 dB
TAPE-1, 2 PLAY, TAPE/AUX
. . . . . 70 dB
Controls
BASS . . . . . ±10 dB at 50 Hz
MIDRANGE . . . . ±5 dB at 1.5 kHz
TREBLE . . . . . ±10 dB at 10 kHz
SUBSONIC FILTER
. . . . . −3 dB at 16 Hz (6 dB/oct)
HIGH FILTER . . . −3 dB at 3 kHz (6 dB/oct)
LOUDNESS (VOLUME control: −30 dB position)
. . . . . 8 dB at 50 Hz
6 dB at 10 kHz
AUDIO MUTING . −20 dB

FM section

Tuning range . . . . . 88 to 108 MHz
Usable sensitivity
Mono IHF . . . . . 9.8 dBf (1.7 μV)
DIN . . . . . 1.0 μV
Stereo IHF . . . . . 17 dBf
50 dB quieting sensitivity
Mono . . . . . 12.5 dBf
Stereo . . . . . 35 dBf
Signal to noise ratio (at 65 dBf)
Mono . . . . . 82 dB
Stereo . . . . . 76 dB
Distortion (at 65 dBf)
Mono . . . . . less than 0.08 % at 100 Hz
less than 0.07 % at 1,000 Hz
less than 0.08 % at 6,000 Hz
Stereo . . . . . less than 0.1 % at 100 Hz
less than 0.1 % at 1,000 Hz
less than 0.15 % at 6,000 Hz
Alternate channel selectivity (at 400 kHz)
. . . . . 70 dB
※ Dolby Noise Reduction Effect
. . . . . 10 dB
Capture ratio . . . . . 1.0 dB
Image response ratio . . 90 dB
Spurious response ratio
. . . . . 95 dB
IF response ratio . . . . 95 dB
Stereo separation . . . . 40 dB at 100 Hz
45 dB at 1,000 Hz
35 dB at 10,000 Hz
30 dB from 30 to 15,000 Hz
Frequency response . . 30 to 15,000 Hz
+0.2 dB, −1.0 dB
Antenna input impedance
. . . . . 300 ohms balanced
75 ohms unbalanced

AM section

Tuning range . . . . . 530 to 1,600 kHz
Usable sensitivity (bar antenna)
. . . . . 50 dB/m (300 μV/m)
Selectivity . . . . . 30 dB
Signal to noise ratio . . 50 dB
Distortion (at 30 % Modulation, 80 dB/m)
. . . . . less than 0.5 %

Others

Power requirements
Power voltage . . . . 100, 120, 220, 240 V (50/60 Hz)
Power consumption
Rated consumption
. . . . . 500 watts
Dimensions . . . . . 560 mm (22-1/16") W
201 mm (7-15/16") H
475 mm (18-3/4") D
Weight . . . . . 21.0 kg (46.3 lbs) net
23.7 kg (52.2 lbs) packed

* Design and specifications subject to changes without notice for improvements.
* In order to simplify the explanation illustrations may sometimes differ from the originals.
※ Dolby is a trademark of Dolby Laboratories, Inc.

1. BLOCK DIAGRAM

● Audio Section

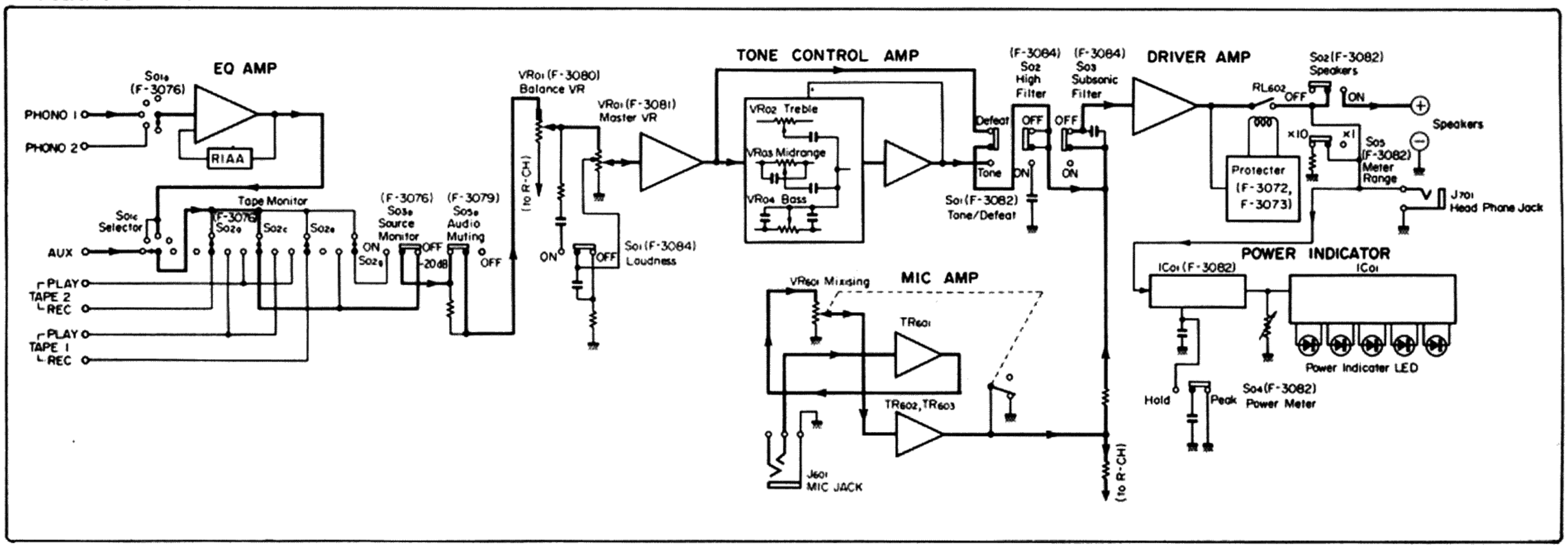

● Tuner Section

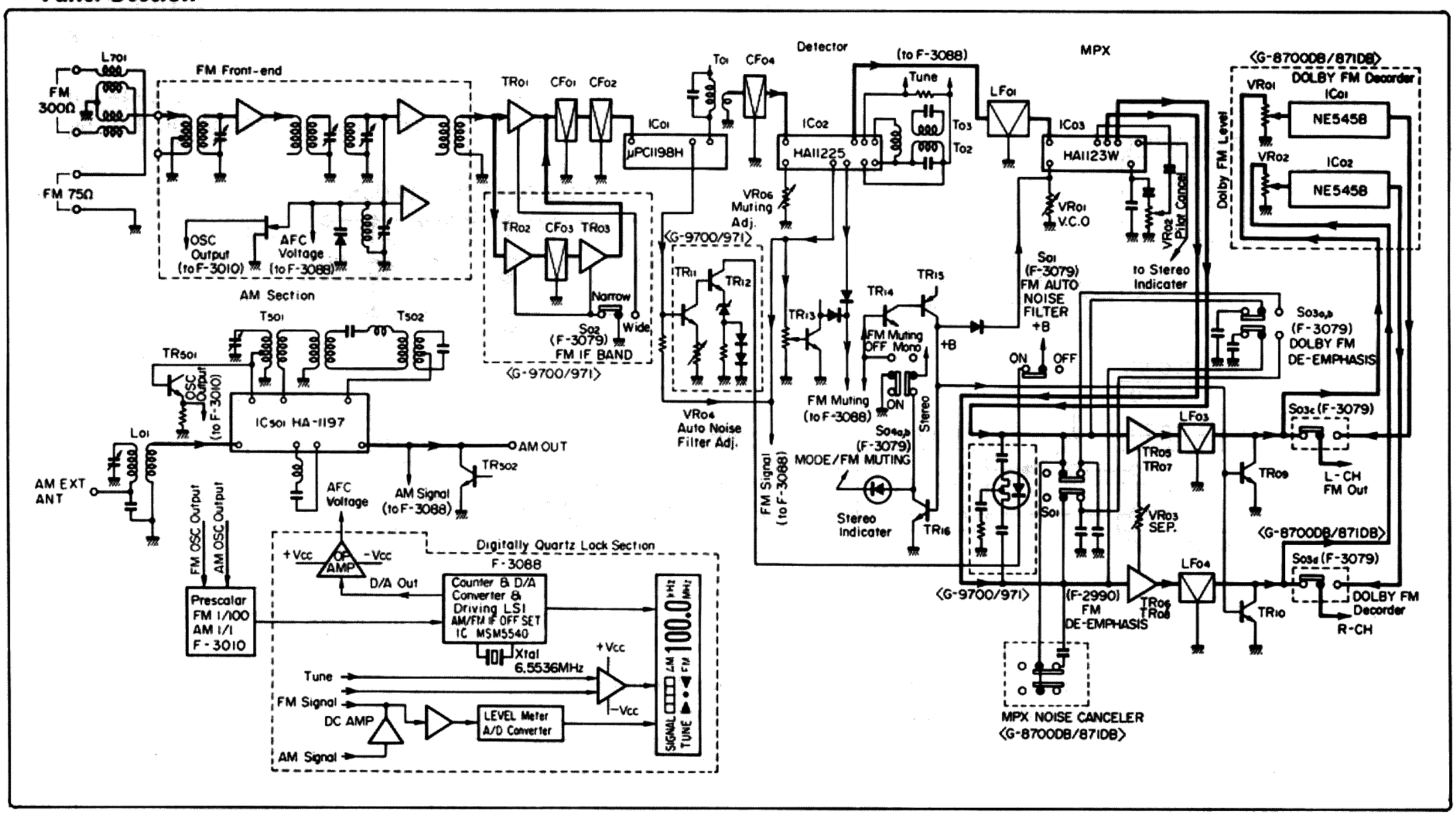

2. ADJUSTMENTS

2-1. Driver Circuit Board Adjustments (See Top View on Page 13 & 14)

Note: 1. Master Volume . . . . . Minimum
2. Room Temperature . . . 18°C ~ 28°C (65°F ~ 83°F)
3. For Adjustment, run the unit for more than 5 minutes after the power is switched on.

STEP	SUBJECT	MEASURE OUTPUT	ADJUST	ADJUST FOR	REMARKS
1.	DC 0V Adj. L-CH	Speaker terminal (L-CH)	VR01 (L-CH) F-3074	DC 0V ±5 mV	Before turning ON power switch, set VR to center position.
2.	DC 0V Adj. R-CH	Speaker terminal (R-CH)	VR01 (R-CH) F-3074		
3.	Bias Current Adj. L-CH	Between emitter terminals of TR02 and TR03 on F-3114 (As shown Ⓔ in Figs. 4-1 & 4-3 on page 13 & 14)	VR03 (L-CH) F-3074	DC ±5 mV	• Before turning ON power switch, turn VR03 fully counterclockwise. This bias current adjustment converts current value into voltage by Ohms law.
4.	Bias Current Adj. R-CH	Between emitter terminals of TR02 and TR03 on F-3115 (As shown Ⓔ in Figs. 4-1 & 4-3 on page 13 & 14)	VR03 (R-CH) F-3074		

2-2. Power Meter Adjustment (See Top View on Page 13 & 14)

Note: 1. For adjustment, run the unit for more than 4 minutes after the power is switched ON.
2. Input . . . . . AUX
3. Input Signal . . . . . Sine Wave (1 kHz)
4. Speaker load 8Ω
5. Meter Range X1
6. Master Volume . . . . . Maximum

<G-9700/971 Only>

STEP	MEASURE OUTPUT	OUTPUT LEVEL	ADJUST	ADJUST FOR
1.	Speaker Terminal L-CH AC Volt Meter	14.1V (25W)	VR01 F-3082	Make every 10 lamps lighting
2.	Speaker Terminal R-CH AC Volt meter	Same as above	VR02 F-3082	

<G-8700DB/871DB Only>

STEP	MEASURE OUTPUT	OUTPUT LEVEL	ADJUST	ADJUST FOR
1.	Speaker Terminal L-CH AC Volt Meter	12.6V (20W)	VR01 F-3082	Make every 10 lamps lighting
2.	Speaker Terminal R-CH AC Volt Meter	Same as above	VR02 F-3082	

2-3. FM Adjustment (See Top View on Page 13 & 14)

Note: 1. Selector . . . . . FM
2. FM Muting Switch . . . . . OFF

3. Connection . . Connect the output of genescope to TP through 100 pF ceramic capacitor.
4. Confirm the voltage, DC 12.5 ~ 13.5V at TP44 on F-2990. If not, set the voltage at TP44 to DC 13V by VR601 on F-3071.

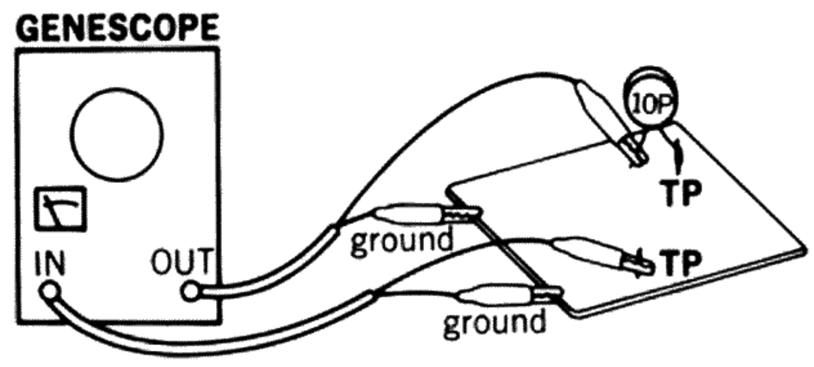

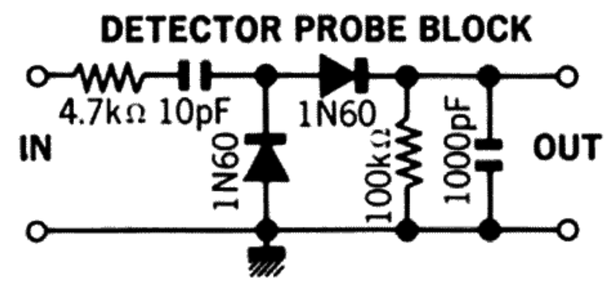

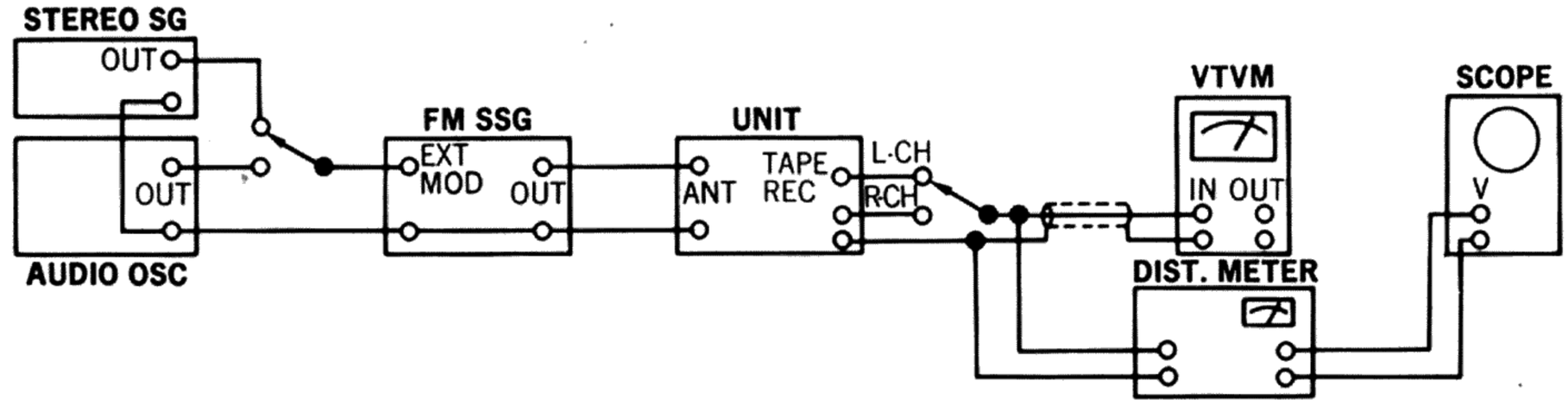

(1) FM IF, RF Adjustment and Dial Calibration

*** Before making adjustments of steps 2 ~ 5, run the unit for more than 2 minutes and make the dial pointer go round on the dial scale at once by tuning knob.**

STEP	SUBJECT	FEED SIGNAL FROM	FEED SIGNAL TO	MEASURE OUTPUT	ADJUST	ADJUST FOR	REMARKS
1.	IF Coil	Output 50 ~ 60 dB Genescope	TC03 (Front-end)	Lead wire of R32 (Point Ⓑ) Use Detector Probe	T01 (Front-end) T01 (F-2990)	Max. IF waveform	
2.	Discriminator Coil In case of using Genescope	Output 80 dB Genescope	TC03 (Front-end)	TP52 (F-2990)	T02, T03 (F-2990)	Steep linearity of S curve Make symmetrical S curve	
	Discriminator Coil In case of using Dist meter	98 MHz ANT Input 65 dBf (59.8 dB) 1000 Hz (100% MOD) FM SSG	ANT terminal 300Ω	REC OUT L or R-CH Dist Meter VTVM & Scope	T02, T03 (F-2990) T01 (Front-end) T01 (F-2990)	Min. THD	
3.	Tune Indicator Adj.	Receive the nearest FM station		Between Terminal 15 & 17 of F-3088 DC Volt Meter	T02 (F-2990)	DC 0V ±5 mV	15 (F-3088) 17 (F-3088)
4.	AFC Voltage Adj.			25 Terminal of F-3088 DC Volt Meter	VR03 (F-3088)	DC 7V ±0.2V	Note: Steps 4 & 5 should be performed after grounding the collector of TR15 on F-3088
5.	98 MHz Dial Calibration	No Input		Dial Pointer	Tuning knob	98 MHz	
		Same as above		Indication of Display unit	TC04 (Front-end)	98 MHz	
6.	98 MHz RF Adj.	98 MHz ANT Input Minimum value with sine wave 1000 Hz (100% MOD) FM SSG	ANT terminal 300Ω	REC OUT L or R-CH VTVM & Scope	TC01, TC02 TC03 (Front-end)	Max. Output	
7.	Signal Indicator Adj.	98 MHz ANT Input 65 dBf (59.8 dB) 1000 Hz (100% MOD) FM SSG	Same as above	Signal indicator lamp	VR04 (F-3088)	Make every 8 lamps lighting	SIGNAL□□□□□□□□
		No ANT Input		Same as above	VR04 (F-3088)	Make only one lamp lighting	SIGNAL□

Note: Confirm the Dial Calibration on the frequencies of 90 MHz & 106 MHz in step 5.

(2) FM STEREO Adjustment

Note: 1. Selector . . . . . FM AUTO 2. FM MODE Switch . . . . . AUTO

STEP	SUBJECT		FEED SIGNAL FROM	FEED SIGNAL TO	MEASURE OUTPUT	ADJUST	ADJUST FOR	REMARKS
1.	PLL VCO Adj.		98 MHz ANT Input 65 dBf (59.8 dB) FM SSG Pilot 19 kHz (9% MOD) R (or L) Mode 1 kHz + Pilot (100% MOD) STEREO SG	ANT terminal 300Ω	Stereo indicator	VR01 (F-2990)	Light indicator	Adjust the VR within center of lighting level.
	PLL VCO Adj. In case of using Freq. Counter		98 MHz ANT Input 65 dBf (59.8 dB) FM SSG (No MOD)	Same as above	TP53 (F-2990) Use Freq. counter	VR01 (F-2990)	76 kHz ±150 Hz	
2.	PILOT cancel Adj.		98 MHz ANT Input 65 dBf (59.8 dB) FM SSG Pilot 19 kHz (9% MOD)	Same as above	REC OUT L or R-CH VTVM & Scope	VR02 (F-2990)	Min. Output	Confirm Both Channel
	PILOT cancel Adj. In case of Dist. meter		98 MHz ANT Input 65 dBf (59.8 dB) FM SSG Pilot 19 kHz (9% MOD) L-CH or R-CH MODE 1 kHz + Pilot (100% MOD)	Same as above	Same as above	VR02 (F-2990)	Min. Distortion	
3.	Separation		98 MHz ANT Input 65 dBf (59.8 dB) FM SSG Pilot 19 kHz (9% MOD) R Mode 1 kHz + Pilot (100% MOD) STEREO SG	Same as above	REC OUT L-CH VTVM & Scope	VR03 (F-2990)	OUT −45 dB	Confirm separation L-CH → R-CH (−45 dB) Auto Noise Filter or MPX Noise Canceler Switch . . . OFF
4.	Muting level	1	98 MHz ANT Input 0 dBf (−5.2 dB) FM SSG Pilot 19 kHz (9% MOD) SUB 1 kHz + Pilot (100% MOD) STEREO SG	Same as above	REC OUT L or R-CH VTVM & Scope	VR06 (F-2990)	Muting level 0 dBf (−5.2 dB)	Turn VR05 fully clockwise, FM MUTING Switch . . . ON
		2	98 MHz ANT Input 15 dBf (9.8 dB) FM SSG Pilot 19 kHz (9% MOD) SUB 1 kHz + Pilot (100% MOD) STEREO SG	Same as above	Same as above	VR05 (F-2990)	Muting level 15 dBf (9.8 dB)	FM MUTING Switch . . . ON
5.	Auto Noise Filter Adj. (G-9700/971 only)	1	98 MHz ANT Input 45 dBf (39.8 dB) 10 kHz (100% MOD) FM SSG	Same as above	REC OUT L or R-CH VTVM & Scope		Read the indication on VTVM	Auto Noise Filter Switch . . . OFF
		2	Same as above	Same as above	Same as above	VR04 (F-2990)	−3 dB from the indication above	Auto Noise Filter Switch . . . ON
6.	DOLBY FM Volume (G-8700DB/871DBonly)		98 MHz ANT Input 65 dBf (59.8 dB) 100 Hz (100% MOD) FM SSG	Same as above	REC OUT L-CH VTVM	VR01 (F-2688)	Output level 560 mV	DOLBY FM DECODER Switch . . . ON Use VTVM (100kΩ/V)
					REC OUT R-CH VTVM	VR02 (F-2688)		

• NEW MEASUREMENT FOR FM.

Input signal level under the provision of IHFM-T-200, a new measurement method is indicated by available power ratio "dBf" To obtain approximate available power ratio "dBf", abstract 0.8 from attenuater indication of general FMSG (open load indication type); however, the former measurement, IHFM-T-100 is designated together too.

The way of modulation of IHFM-T-200 is shown below.

	modulation frequency	modulation mode	modulation factor
FM MONO	1000 Hz		100%
FM STEREO	1000 Hz	SUB	Pilot 9% Pilot + SUB 100%

• The relation between the standard input 65 dBf of IHFM-T-200 and the former indication "dB" is shown below.

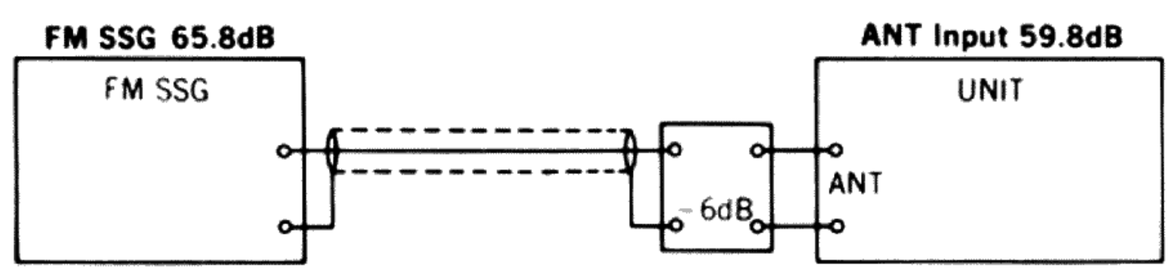

- **Selection of Intermediate Frequencies (FM) (Refer to parts location F-3088 on page 9)**

The digital locking point differs with the frequency rank of the ceramic filter used in the F-2990. When the central frequency (shown by a color) of the ceramic filter is changed, the following connection must be made by using jumper wires:

- Unify the color marks of the FM ceramic filters (CF01 ~ CF05) on the F-2990 with the same color.
- Select the joints A, B, and C of F-3088 according to color marks as shown in the following table:

Colouring	Intermediate frequency	Connecting Position of Jumper wire on F-3088				Connecting Position of Diode on F-3088			
		A	B	C	Jumper wire Total Q'ty	D26	D25	D24	Diode Total Q'ty
Black	10.64MHz			●	1			●	1
Brown	10.66MHz		●		1		●		1
Blue	10.68MHz		●	●	2		●	●	2
Red	10.70MHz	●			1	●			1
Orange	10.72MHz	●		●	2	●		●	2
Gray	10.74MHz	●	●		2	●	●		2
White	10.76MHz	●	●	●	3	●	●	●	3

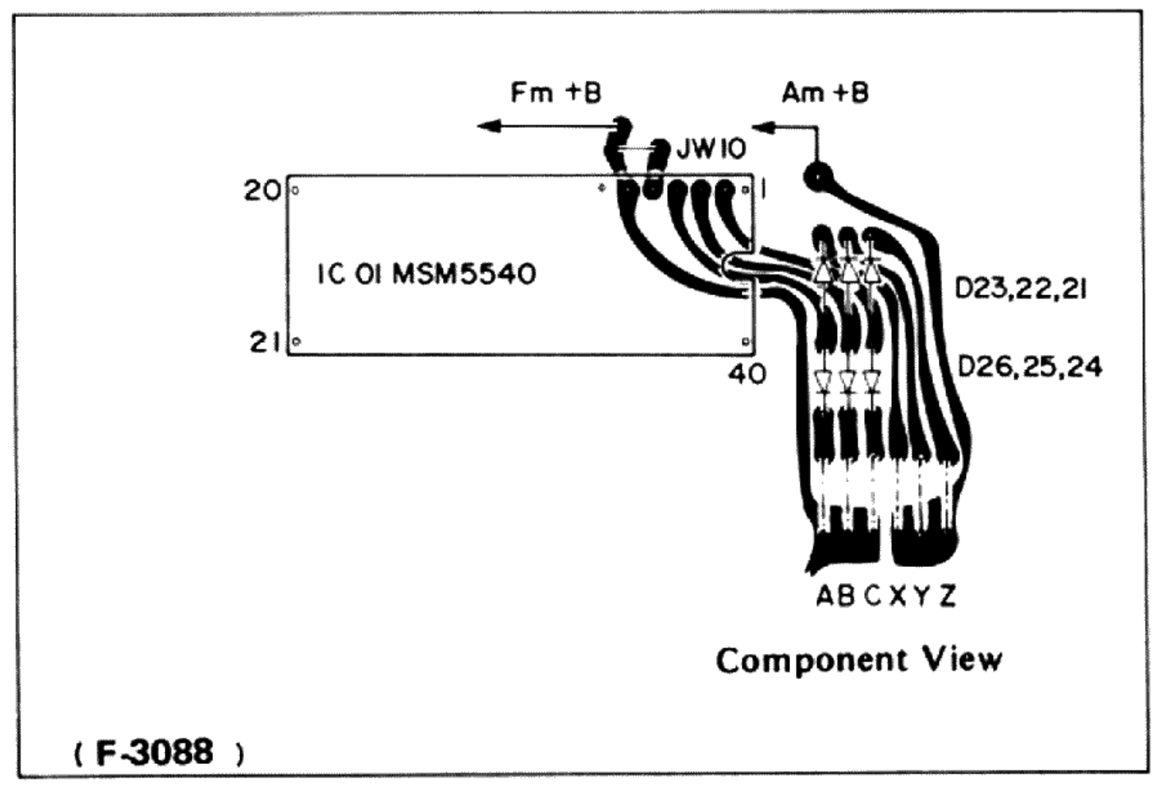

2-4. AM IF Adjustment and Dial Calibration (See Top View on Page 13 & 14)

Note: 1. Selector . . . . . AM

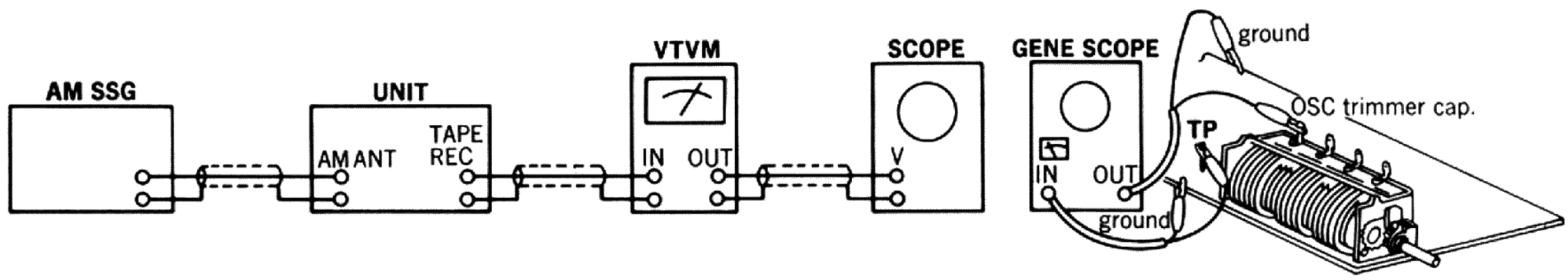

STEP	SUBJECT	FEED SIGNAL FROM	FEED SIGNAL TO	MEASURE OUTPUT	ADJUST	ADJUST FOR	REMARKS
1.	IF Coil	Genescope Output 70 dB	TC06 (Front-end)	TP11 F-2990	T502, T504 (F-2990)	Max. Output	
2.	600 kHz Dial Calibration	No Input		Dial Pointer	Tuning knob	600 kHz	
		Same as above		Indication of digital display unit	T501 (F-2990)	600 kHz	
	1400 kHz Dial Calibration	Same as above		Dial Pointer	Tuning knob	1400 kHz	
		Same as above		Indication of digital display unit	TC06 (Front-end)	1400 kHz	
3.	600 kHz RF Adj.	600 kHz ANT Input 50 dB 400 Hz (MOD 30%) AM SSG	ANT terminal	REC OUT L or R-CH VTVM & Scope	Bar Antenna L01 (F-3048)	Max. Output	
	1400 kHz RF Adj.	1400 kHz ANT Input 50 dB 400 Hz (MOD 30%) AM SSG	Same as above	Same as above	TC05 (Front-end)	Same as above	
4.	Signal Indicator Adj.	1000 kHz ANT Input 80 dB 400 Hz (MOD 30%) AM SSG	Same as above	Signal indicator lamp	VR02 (F-3088)	Make every 8 lamps lighting	SIGNAL□□□□□□□□
		No Input		Same as above	VR02 (F-2088)	Make only one lamp lighting	SIGNAL□

3. PARTS LOCATION & PARTS LIST

- Since some of capacitors and resistors are omitted from parts lists in this Service Manual, refer to the Common Parts List for capacitors & resistors which was appended previously to each Sansui Manual.

3-1. F-3082 Power Indicator Circuit Board (Stock No. 7598411 = G-9700/971) (Stock No. 7598591 = G-8700DB/871DB)

Conductor Side

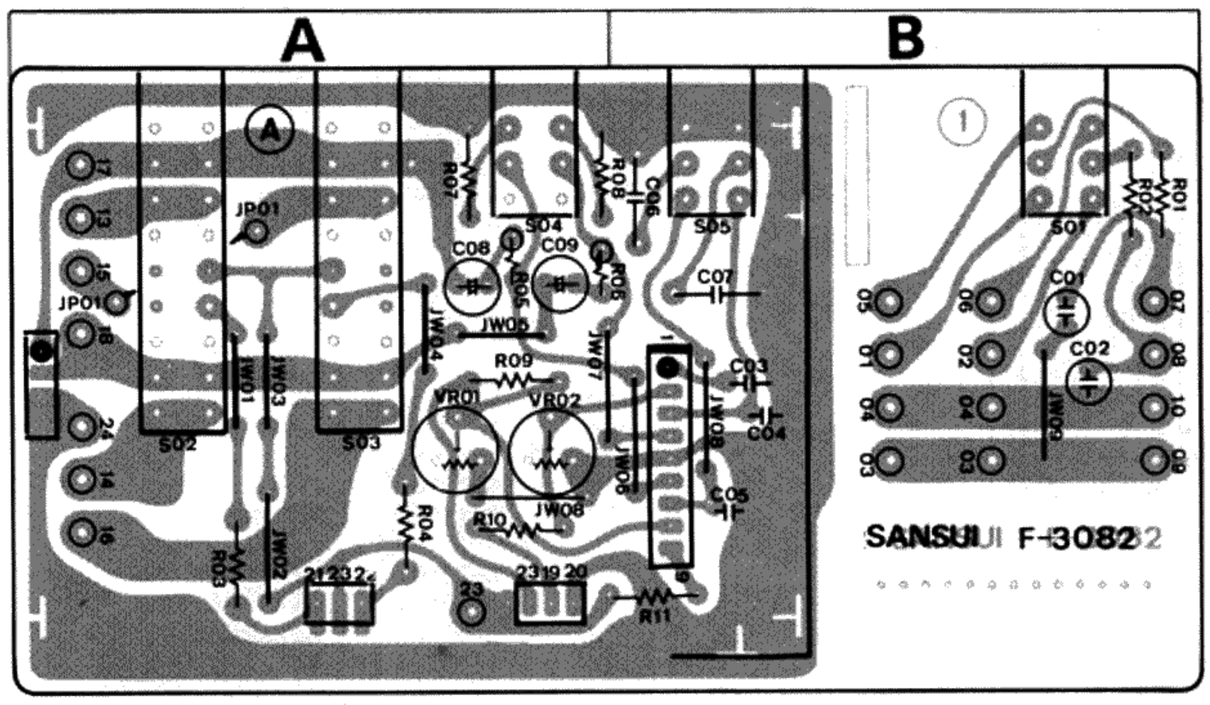

Parts List

Parts No.	Stock No.	Description	Position
•IC			
IC 01	0361000	TA7318P	
C 01, 02	0620221	220pF 50V P.C.	B
R 03, 04	0210273	27kΩ 1/2W N.I.R.	A
VR01, 02	1035100	3.3kΩ (B) Volume, Power Indicator Level Adj.	A
S 01 ~ 05	1132190	Push Switch Ass'y, Tone, Speaker A, B, Power Meter, Meter Range	A,B

Note: Parts marked X, Y or without marks indicate as follow:
1. Parts marked X in parts list . . . . . for G-9700/971 Only
2. Parts marked Y in parts list . . . . . for G-8700DB/871DB Only
3. Parts without marks in parts list. . . for both G-9700/971 and G-8700DB/871DB

3-2. F-2865 Equalizer Circuit Board (Stock No. 7551601 = G-9700/971) (Stock No. 7551611 = G-8700DB/871DB)

Conductor Side

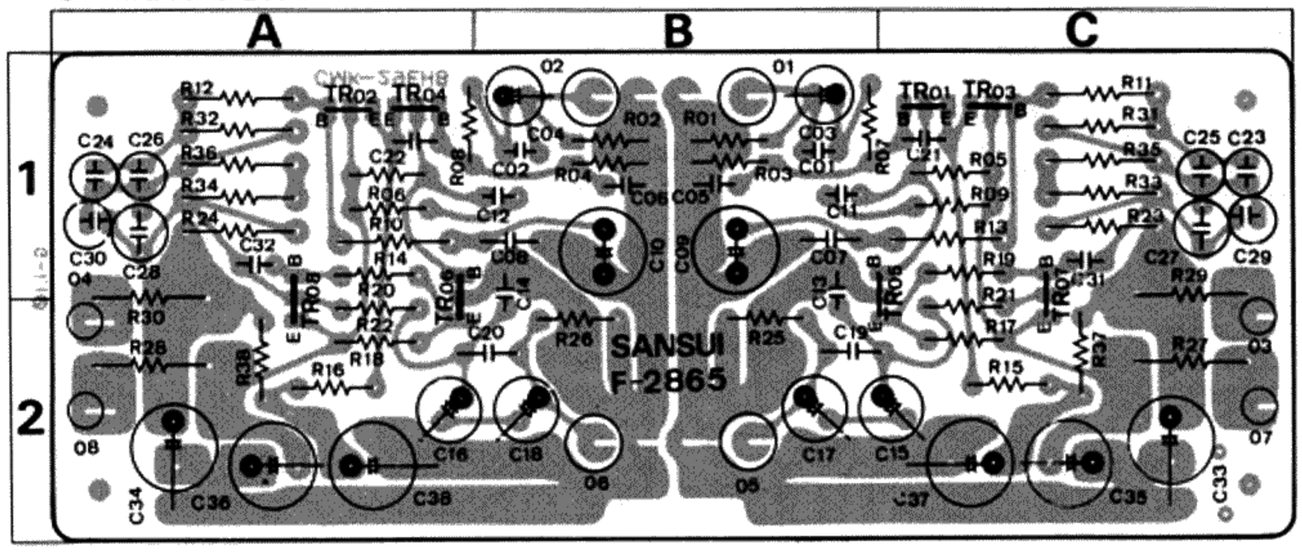

Parts List

Parts No.	Stock No.	Description	Position
•Transitor			
TR01, 02	0300900, 1	2SA906 G, H	1C.1A
TR03, 04	0300900, 1	2SA906 G, H X	1C.1A
TR05, 06	0306550, 1	2SC1775 E, F X	1,2B.1,2A
TR07, 08	0306550, 1 0306740, 1	2SC1775 E, F ..... X 2SC1845 F, E ..... Y	1,2C.1,2A
C 05, 06	0620101	100pF 50V P.C. X	1B
C 23, 24	0625122	1200pF 50WV P.C.	1C.1A
C 25, 26	0620391	390pF 50V P.C. X	1C.1A
C 27, 28	0625562	5600pF 50V P.C.	1C.1A
C 29, 30	0620101 0622121	100pF 50V P.C. ..... X 120pF 125V P.C. ..... Y	1C.1A
R 11, 12	0230101	100Ω 1/4W M.R.	1C.1A
R 13, 14	0210562	1kΩ 1/4W M.R.	1C.1A
R 23, 24	0230102	5.6kΩ 1/2W N.I.R.	1C.1A
R 27, 28	0210270	27Ω 1/2W N.I.R. X	2C.2A
R 27	0210101	100Ω 1/2W N.I.R. ..... Y	
R 29, 30	0210270	27Ω 1/2W N.I.R. X	1C.1, 2A
R 29	0210101	100Ω 1/2W N.I.R. ..... Y	
R 31, 32	0230473 0230223	47kΩ 1/4W M.R. ..... X 22kΩ 1/4W M.R. ..... Y	1C.1A
R 33, 34	0230223 0230473	22kΩ 1/4W M.R. ..... X 47kΩ 1/4W M.R. ..... Y	1C.1A
R 35, 36	0230564 0230274	560kΩ 1/4W M.R. ..... X 270kΩ 1/4W M.R. ..... Y	1C.1A

3-3. F-3080 Tone Control Circuit Board (Stock No. 7563011 = G-9700/971) (Stock No. 7563041 = G-8700DB/871DB)

Conductor Side

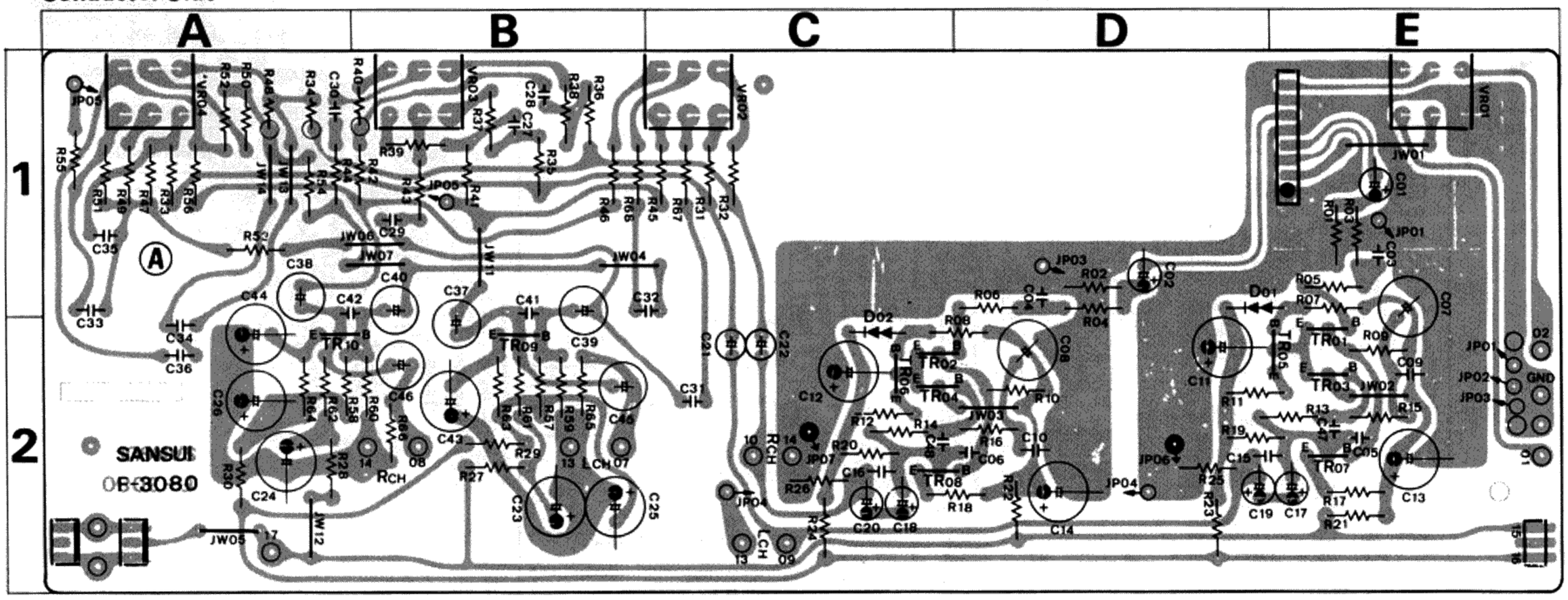

Parts List

Parts No.	Stock No.	Description	Position
•Transitor			
TR01, 02	0306070, 1 0306740, 1	2SC1313 F, G 2SC1845 F, E	2E.2C
TR03, 04	0306070, 1 0306740, 1	2SC1313 F, G 2SC1845 F, E	2E.2C
TR05, 06	0306070, 1 0306740, 1	2SC1313 F, G 2SC1845 F, E	2D,E.2C
TR07, 08	0301090, 1	2SA992 F, E	2E.2C
TR09, 10	0306070, 1 0306740, 1	2SC1313 F, G 2SC1845 F, E	2B.2A
•Varistor			
D 01, 02	0340120 0340150	VD1212 MV-12	1D.2C
R 19, 20	0210392	3.9kΩ 1/2W N.I.R.	1D.2C
VR01	1015340, 1	250kΩ (MN) x 2 Balance Volume	1E
VR02	1015200, 1	100kΩ (B) x 2 Treble Volume	1C
VR03	1015200, 1	100kΩ (B) x 2 Midrange Volume	1B
VR04	1015200, 1	100kΩ (B) x 2 Bass Volume	1A

3-4. F-3074 Driver Amp. Circuit Board (Stock No. 7572421 = G-9700/971) (Stock No. 7572441 = G-8700DB/871DB)

Conductor Side

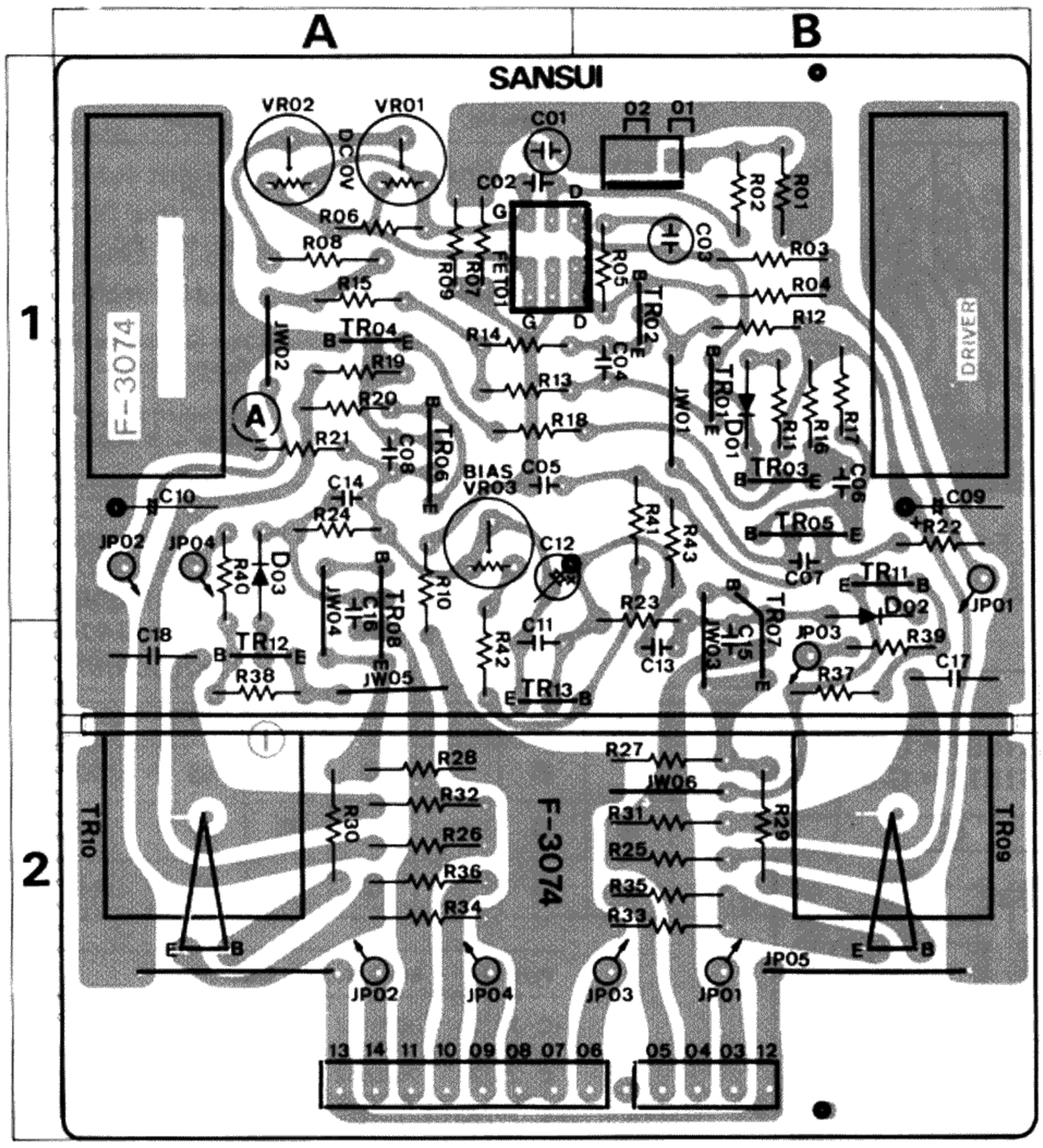

Parts List

Parts No.	Stock No.	Description	Position
•Transistor			
TR01	0306550, 1	2SC1775 E, F	1B
TR02	0306550, 1	2SC1775 E, F	1B
TR03	0300930, 1	2SA872 D, E	1B
TR04	0300930, 1	2SA872 D, E	1A
TR05	0301030, 1	2SA939 B, V	1B
TR06	0306680, 1	2SC2071 B, V	1A
TR07	0306680, 1	2SC2071 B, V	1, 2B
TR08	0301030, 1	2SA939 B, V	1, 2A
TR09	0306960, 1	2SC2238B-LB O, Y	2B
TR10	0301260, 1	2SA968B-LB O, Y	2A
TR13	0306401, 2	2SC1904 B, V	2A
•FET			
FET01	0370251, 2	2SK97-2, 3	1A
•Diode			
D 01	0311160 0311180	1S2473D 1S1588	1B
C 01	0620101	100pF 50V P.C.	1A
C 03	0620151	150pF 50V P.C.	1B
C 17	0655223	22000pF 500V C.C.	2B
C 18	0655223	22000pF 500V C.C.	2A
R 03	0230332	3.3kΩ 1/4W M.R.	1B
R 04	0230332	3.3kΩ 1/4W M.R.	1B
R 08	0210392	3.9kΩ 1/2W N.I.R.	1A
R 17	0191151	150Ω 1/4W F.R.	1B
R 20	0191151	150Ω 1/4W F.R.	1A
R 23	0210391	390Ω 1/2W N.I.R.	1, 2B
R 24	0210391	390Ω 1/2W N.I.R.	1A
R 25	0210470	47Ω 1/2W N.I.R.	2B
R 26	0210470	47Ω 1/2W N.I.R.	2A
R 27	0210561	560Ω 1/2W N.I.R.	2B
R 28	0210561	560Ω 1/2W N.I.R.	2A
R 29	0210479	4.7Ω 1/2W N.I.R.	2B
R 30	0210479	4.7Ω 1/2W N.I.R.	2A
R 31	0210229	2.2Ω 1/2W N.I.R.	2B
R 32	0210229	2.2Ω 1/2W N.I.R.	2A
R 33	0211560	56Ω 1W N.I.R.	2B
R 34	0211560	56Ω 1W N.I.R.	2A
R 35	0210479	4.7Ω 1/2W N.I.R.	2B
R 36	0210479	4.7Ω 1/2W N.I.R.	2A
VR01	1033570	100Ω (B) Volume, DC 0V Adj.	1A
VR03	1033630	1kΩ (B) Volume, Bias current Adj.	1A

3-5. F-3076 Mic Amp Circuit Board (Stock No. 7563001 = G-9700/971) (Stock No. 7563031 = G-8700DB/871DB)

Conductor Side

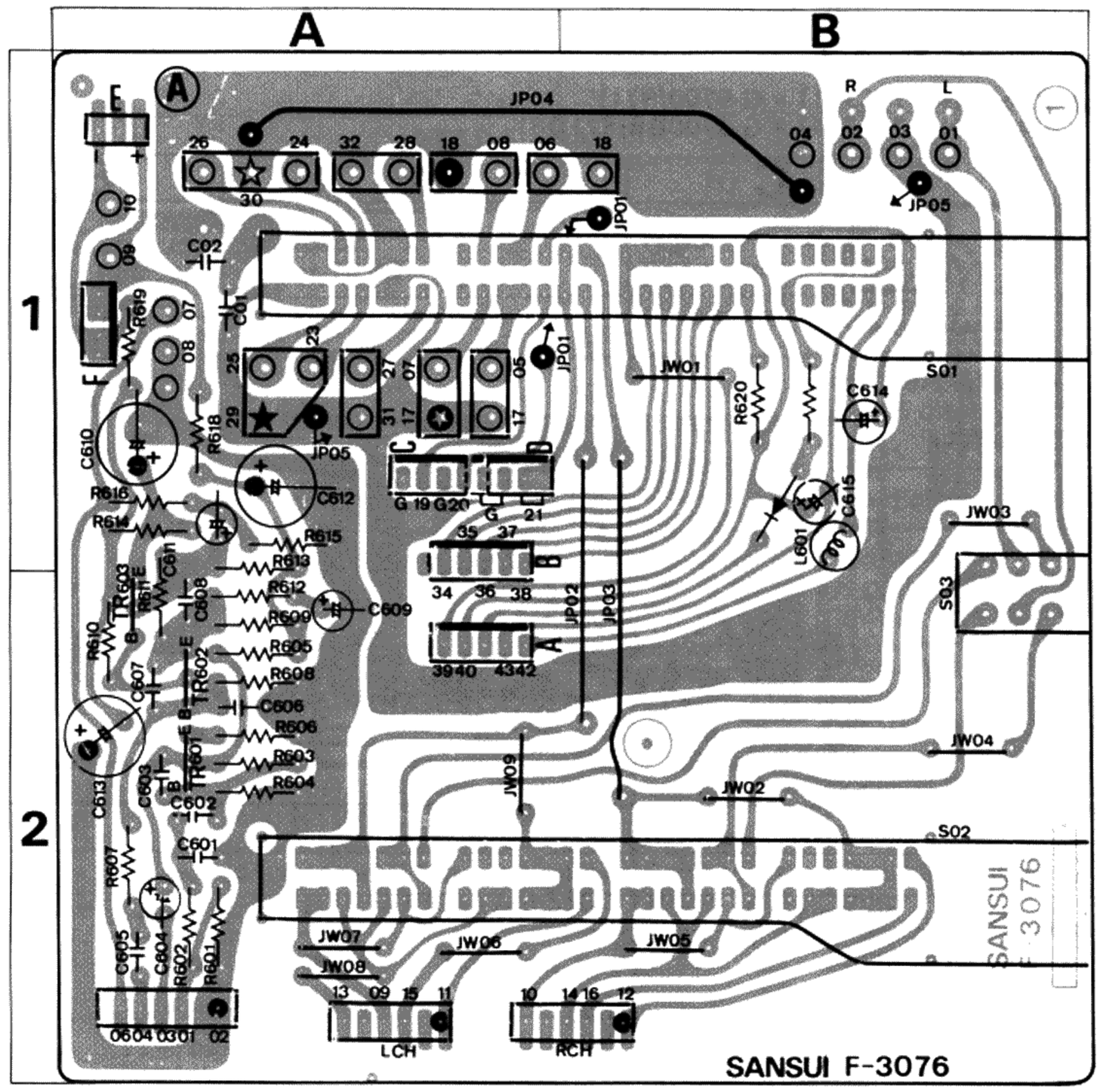

Parts List

Parts No.	Stock No.	Description	Position
•Transistor			
TR601	0306550, 1	2SC1775 E, F	2A
TR602	0301090, 1	2SA992 F, E	2A
TR603	0306550, 1	2SC1775 E, F	2A
C 608	0620681	680pF 50V P.C.	2A
L 601	4900090	2.2mH Inductor	1B
S 01	1190750	Selector Switch	1A, B
S 02	1190740	Tape Monitor Switch	2A, B
S 03	1131550	Source Monitor Switch	1, 2B

3-6. F-2990 Tuner Circuit Board

(Stock No. 7522291 = G-9700/971)
(Stock No. 7522301 = G-8700DB/871DB)

Conductor Side

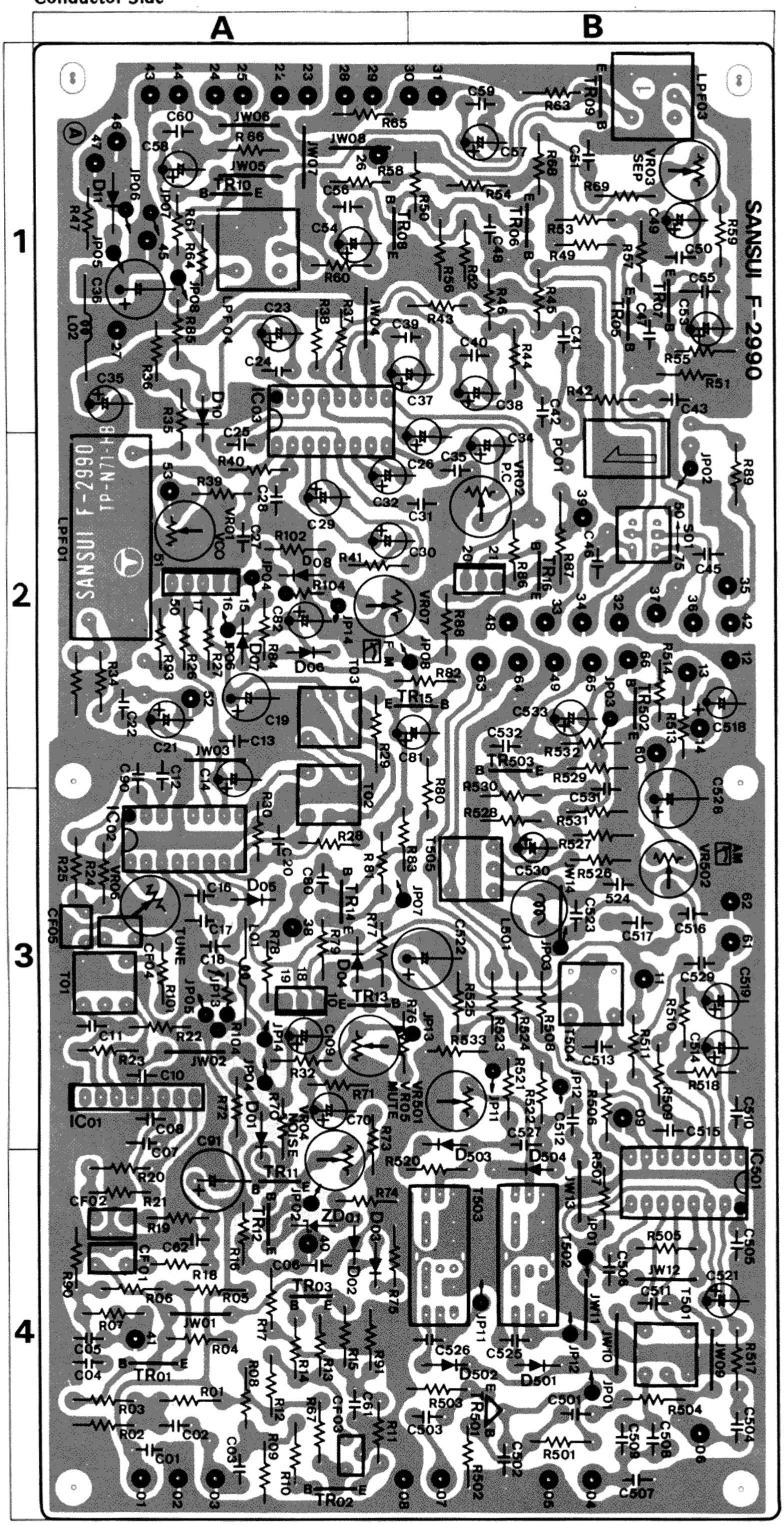

Parts List

Parts No.	Stock No.	Description	Position
•Transistor			
TR01	0306340 ~ 2	2SC1674 M, L, K	4A
TR02	0306340 ~ 2	2SC1674 M, L, K ... X	4A
TR03	0306340 ~ 2	2SC1674 M, L, K ... X	4A
TR05, 06	0300470, 1	2SA726 F, G	1B
TR07, 08	0306070 ~ 2	2SC1313 F, G, H	1B.1A
TR09, 10	0305951 ~ 3	2SC945 Q, P, K	1B.1A
TR11	0305951 ~ 3	2SC945 Q, P, K ... X	4A
TR12	0305951 ~ 3	2SC945 Q, P, K ... X	4A
TR13	0305951 ~ 3	2SC945 Q, P, K	3A
TR14	0305951 ~ 3	2SC945 Q, P, K	3A
TR15	0300510 ~ 2	2SA733A P, Q, R	2B
TR16	0305951 ~ 3	2SC945 Q, P, K	2B
TR501	0306240 ~ 2	2SC1675 M, L, K	4B
TR502	0305951 ~ 3	2SC945 Q, P, K	2B
•IC			
IC 01	0361240	μPC1198H	3A
IC 02	0360930	HA11225	3A
IC 03	0360680	HA11223W	1A
IC 501	0360390	HA1197	4B
•Diode			
D 01	0311160	1S2473D X	3A
	0311180	1S1588 X	
D 04	0311160	1S2473D	3A
	0311180	1S1588	
D 05	0311160	1S2473D	3A
	0311180	1S1588	
D 06	0311160	1S2473D	2A
	0311180	1S1588	
D 07	0311160	1S2473D	2A
	0311180	1S1588	
D 10	0311160	1S2473D	1A
	0311180	1S1588	
D 11	0310340	10D1	1A
•Varistor			
D 02	0340120	VD1212 X	4A
	0340150	MV-12 X	
D 03	0340120	VD1212 X	4A
	0340150	MV-12 X	
•Zener Diode			
ZD01	0316390	RD6.2E B X	4A
	0316400	RD6.2E C X	
PC 01	0920080	P873-G35-911 ... X	1, 2B
C 26	0573338	0.33μF 35V Ta.C.	2B
C 27	0620102	1000pF 50V P.C.	2A
C 28	0620222	2200pF 50V P.C.	2A
C 29	0573478	0.47μF 35V Ta.C.	2A
C 30	0573339	3.3μF 35V Ta.C.	2A
C 32	0573339	3.3μF 35V Ta.C.	2A
C 34	0573338	0.33μF 35V Ta.C.	2B
C 62	0661150	15pF 50V C.T.	4A
C 509	0625391	390pF 50V P.C.	4B
C 524	0620271	270pF 50V P.C.	3B
R 29	0231222	2.2kΩ 1/2W M.R.	2A
R 87	0211221	220Ω 1W N.I.R.	2B
L 01	4900100	3.3μH Peaking Coil	3A
L 02	4900100	3.3μH Peaking Coil	1A
L 501	4900220	Inductor, 10μH	3B
T 01	4235930	IF Coil, 10.7 MHz	3A
T 02	4236230	FM Detector Coil	3A
T 03	4236240	FM Detector Coil	2A
T 501	4220710	OSC Coil	4B
T 502	4230680	AM IF Coil, 455 kHz	4B
T 504	4230620	AM IF Coil, 455 kHz	3B
LF 01	0910590	Low Pass Filter	2A
LF 03, 04	0910530	Low Pass Filter	1B.1A
VR01	1034240	3.3kΩ (B) Volume VCO Free Run Freq. Adj.	2A
VR02	1035190	100kΩ (B) Volume Pilot Canceler Adj.	2B
VR03	1035090	2.2kΩ (B) Volume Separation Adj.	1B
VR04	1035110	4.7kΩ (B) Volume Auto Noise Canceler Adj. X	4A
VR05	1035130	10kΩ (B) Volume Muting Level Adj.	3A
VR06	1035150	22kΩ (B) Volume Muting Level (15 dBf) Adj.	3A
S 01	1110270	DE-EMPHASIS Switch	2B
CF	0990050	Ceramic Filter Ass'y ..... Y (CF01, CF02, CF04, CF05)	
	0990020	Ceramic Filter Ass'y ..... X (CF01 ~ CF04)	

3-7. F-3088 Digitally Display Circuit Board (Stock No. 7598351 = G-9700/971) (Stock No. 7598541 = G-8700DB/871DB)

Conductor Side

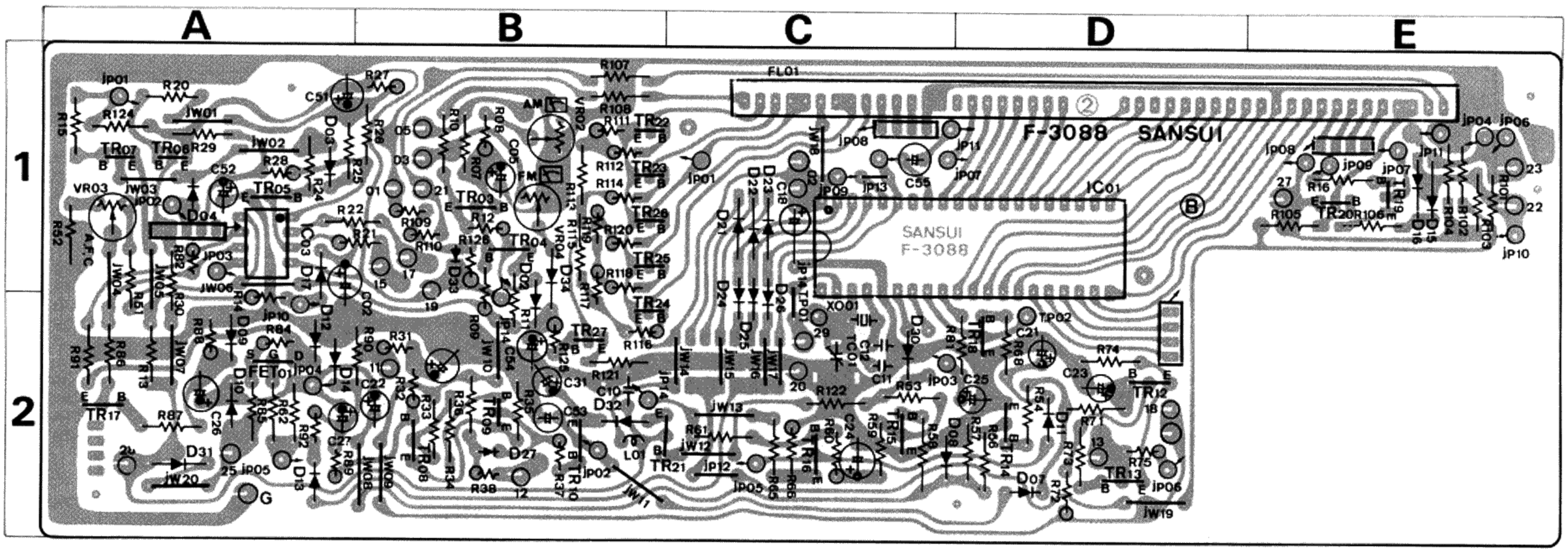

Parts List

Parts No.	Stock No.	Description	Position
•Transistor			
TR03	0305951 ~ 3	2SC945 Q, P, K	1B
TR04	0300510 ~ 2	2SA733A P, Q, R	1B
TR05	0305951 ~ 3	2SC945 Q, P, K	1A
TR06	0305951 ~ 3	2SC945 Q, P, K	1A
TR07	0300510 ~ 2	2SA733A P, Q, R	1A
TR08	0305951 ~ 3	2SC945 Q, P, K	2B
TR09	0305951 ~ 3	2SC945 Q, P, K	2B
TR10	0300510 ~ 2	2SA733A P, Q, R	2B
TR12	0305951 ~ 3	2SC945 Q, P, K	2D
TR13	0305951 ~ 3	2SC945 Q, P, K	2D
TR14	0305951 ~ 3	2SC945 Q, P, K	2D
TR15	0305951 ~ 3	2SC945 Q, P, K	2C
TR16	0305951 ~ 3	2SC945 Q, P, K	2C
TR17	0305951 ~ 3	2SC945 Q, P, K	2A
TR18	0305951 ~ 3	2SC945 Q, P, K	2D
TR19	0300510 ~ 2	2SA733A P, Q, R	1E
TR20	0300510 ~ 2	2SA733A P, Q, R	1E
TR21	0305951 ~ 3	2SC945 Q, P, K	2B
TR22	0300510 ~ 2	2SA733A P, Q, R	1B
TR23	0300510 ~ 2	2SA733A P, Q, R	2B
TR24	0300510 ~ 2	2SA733A P, Q, R	1B
TR25	0300510 ~ 2	2SA733A P, Q, R	1B
TR26	0300510 ~ 2	2SA733A P, Q, R	1B
TR27	0305951 ~ 3	2SC945 Q, P, K	2B

Parts No.	Stock No.	Description	Position
•IC			
IC 01	0360910	MSM5540RS	1C, D
IC 03	0360770	NJM4558D	1A
•FET			
FET01	0370300 ~ 3 0370340 ~ 7	2SK117 O, Y, GR, BL 2SK163-K1, K2, L1, L2, M1, M2, N1, N2	2A
•Diode			
D 02	0311160	1S2473D	2B
D 03	0311160	1S2473D	1A
D 04	0311160	1S2473D	1A
D 07	0311160	1S2473D	2D
D 08	0311160	1S2473D	2C
D 09	0311160	1S2473D	2A
D 10	0311160	1S2473D	2A
D 11	0311160	1S2473D	2D
D 12	0311160	1S2473D	2A
D 13	0311160	1S2473D	2A
D 14	0311160	1S2473D	2A
D 15	0311160	1S2473D	1E
D 16	0311160	1S2473D	1E
D 17	0311160	1S2473D	1A
D 23	0311160	1S2473D	1C
D 26	0311160	1S2473D	1, 2C

Parts No.	Stock No.	Description	Position
D 27	0311160	1S2473D	2B
D 30	0311160	1S2473D	2C
D 31	0311160	1S2473D	2A
D 32	0311160	1S2473D	2B
D 34	0311160	1S2473D	1B
D 35	0310340	10D-1	2B
•Varistor			
D 33	0340170	MV-103	1B
C 11	0669508	8pF 50V C.T.	2C
C 12	0661220	22pF 50V C.T.	2C
L 01	4290011	3.5μF Choke Coil	2B
VR02	1035190	100kΩ (B) VR, AM meter Adj.	1B
VR03	1035110	4.7kΩ (B) VR, AFC Bias Adj.	1A
VR04	1035130	10kΩ (B) VR, FM meter Adj.	1B
TC01	1230150	30pF Trimmer Capacitor	2C
XO01	0930040	Xtal, 6.5536 MHz	2C
FL01	0030060	Fluorescent Display Tube	1C, D, E

3-8. F-3010 Pre Scaler Circuit Board (Stock No. 7598361 = G-9700/971) (Stock No. 7598551 = G-8700DB/871DB)

Conductor Side

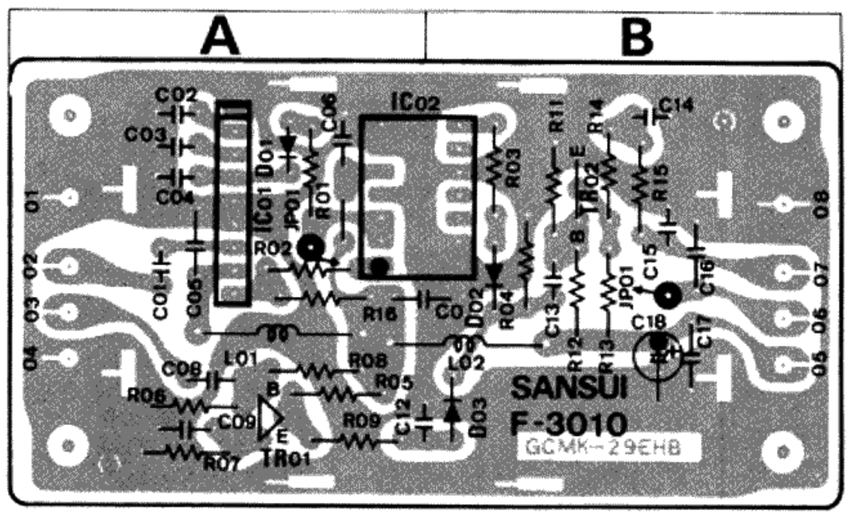

Parts List

Parts No.	Stock No.	Description	Position
•Transistor			
TR01	0306341, 2	2SC1674 L, K	A
TR02	0306341, 2	2SC1674 L, K	B
•IC			
IC 01	0361130	AN6821	A
IC 02	0361120	SN74LS90N	A, B
•Diode			
D 01	0311160	1S2473D	A
D 02	0311160	1S2473D	B
D 03	0311160	1S2473D	B
L 01	4290011	3.5μH Choke Coil	A
L 02	4290011	3.5μH Choke Coil	B

3-9. F-2688 Dolby NR Circuit Board (Stock No. 7660171 = G-8700DB/871DB)

Conductor Side

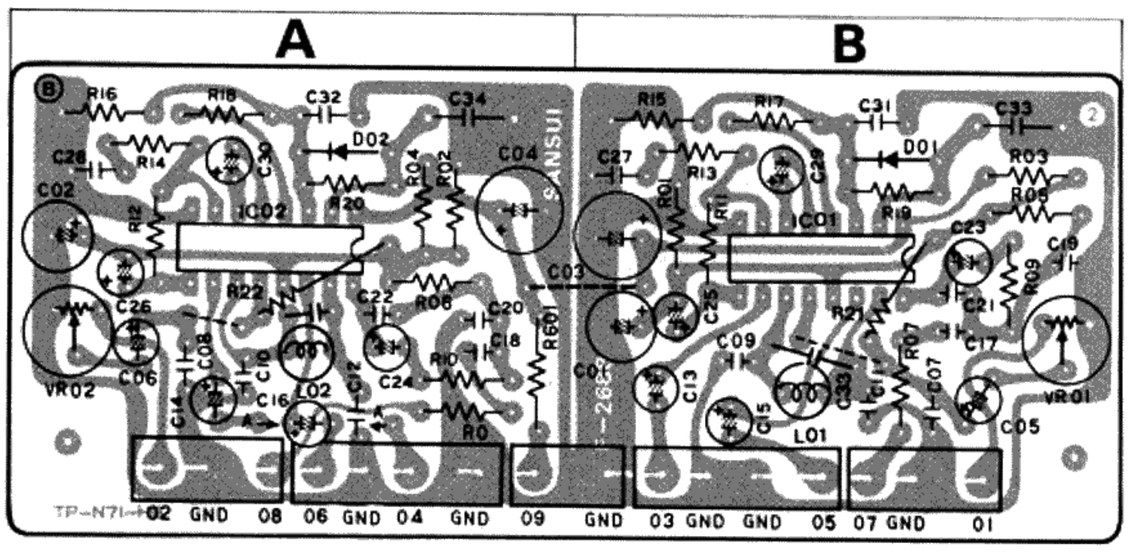

Parts List

Parts No.	Stock No.	Description
•IC		
IC 01, 02	0360340	NE545B
•Diode		
D 01, 02	0310400	1N34A
L 01, 02	4900260	Inductor, 10 mH
VR01, 02	1035430	100kΩ (B) Dolby Level Adj.

3-10. F-3070 Power Supply Circuit Board (Stock No. 7503591 = G-9700/971) (Stock No. 7503621 = G-8700DB/871DB)

Conductor Side

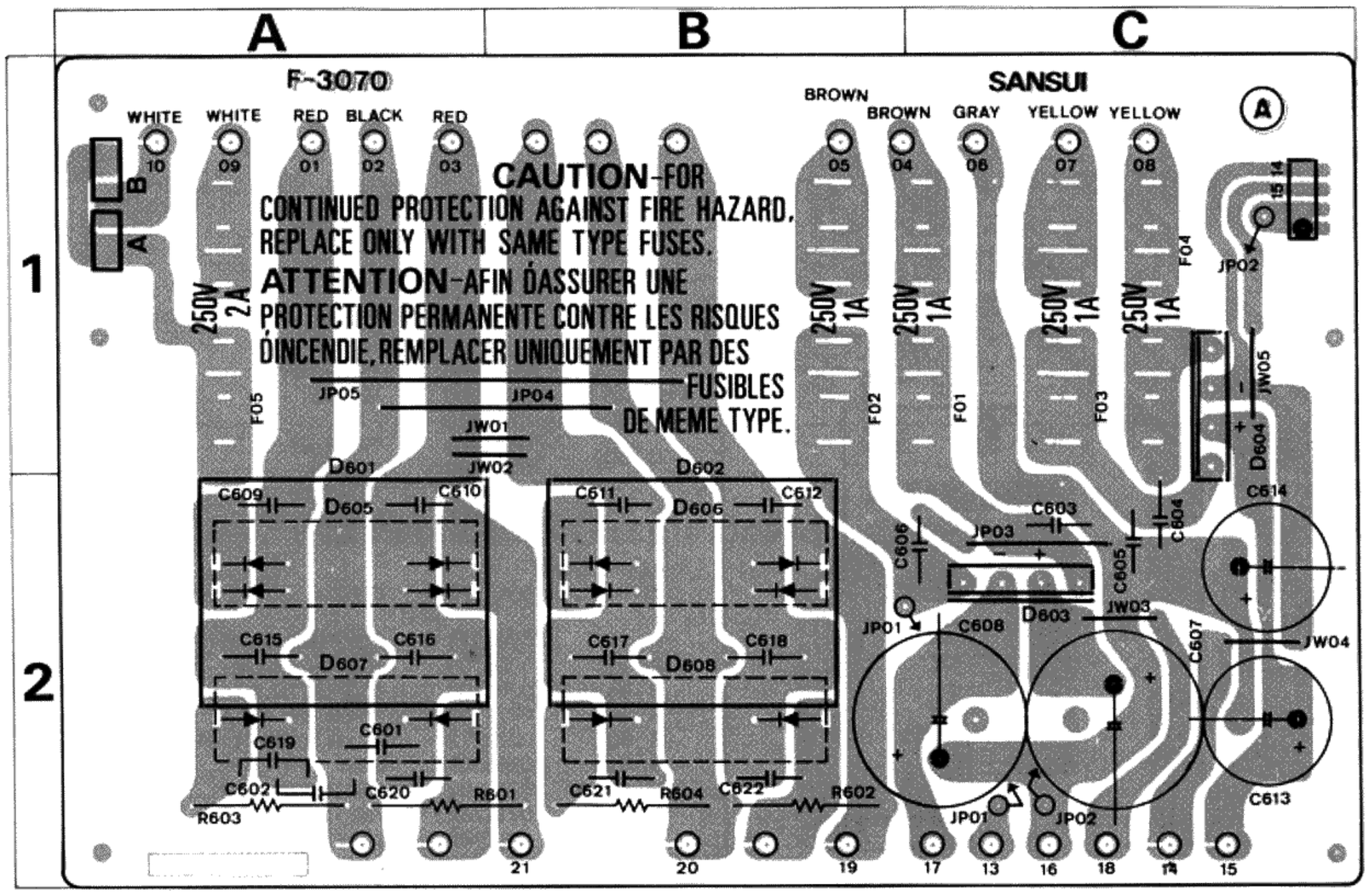

Parts List

Parts No.	Stock No.	Description	Position
•Diode			
D 601	0311670	SS-7	2A
D 602	0311680	SS-7R	2B
D 603	0311700	RB-152	2C
D 604	0311700	RB-152	1C
C 601	0655223	22000pF 500V C.C.	2A
C 602	0655223	22000pF 500V C.C.	2A
C 603	0655103	10000pF 500V C.C.	2C
C 604	0655103	10000pF 500V C.C.	2C
C 605	0655103	10000pF 500V C.C.	2C
C 606	0655103	10000pF 500V C.C.	2C
C 607	0549207	1000μF 63V E.C.	2C
C 608	0549207	1000μF 63V E.C.	2C
C 609	0655103	10000pF 500V C.C.	2A
C 610	0655103	10000pF 500V C.C.	2A
C 611	0655103	10000pF 500V C.C.	2B
C 612	0655103	10000pF 500V C.C.	2B
R 601	0212822	8.2kΩ 2W N.I.R.	1A
R 602	0212822	8.2kΩ 2W N.I.R.	2B
F 01	0432220	1A 250V AC Fuse	1B, C
F 02	0432220	1A 250V AC Fuse	1B
F 03	0432220	1A 250V AC Fuse	1C
F 04	0432220	1A 250V AC Fuse	1C
F 05	0432230	1.5A 250V AC Fuse	1A

3-11. F-3073 Pre Power Supply (Stock No. 7503611 = G-9700/971) (Stock No. 7503641 = G-8700DB/871DB)

Conductor Side

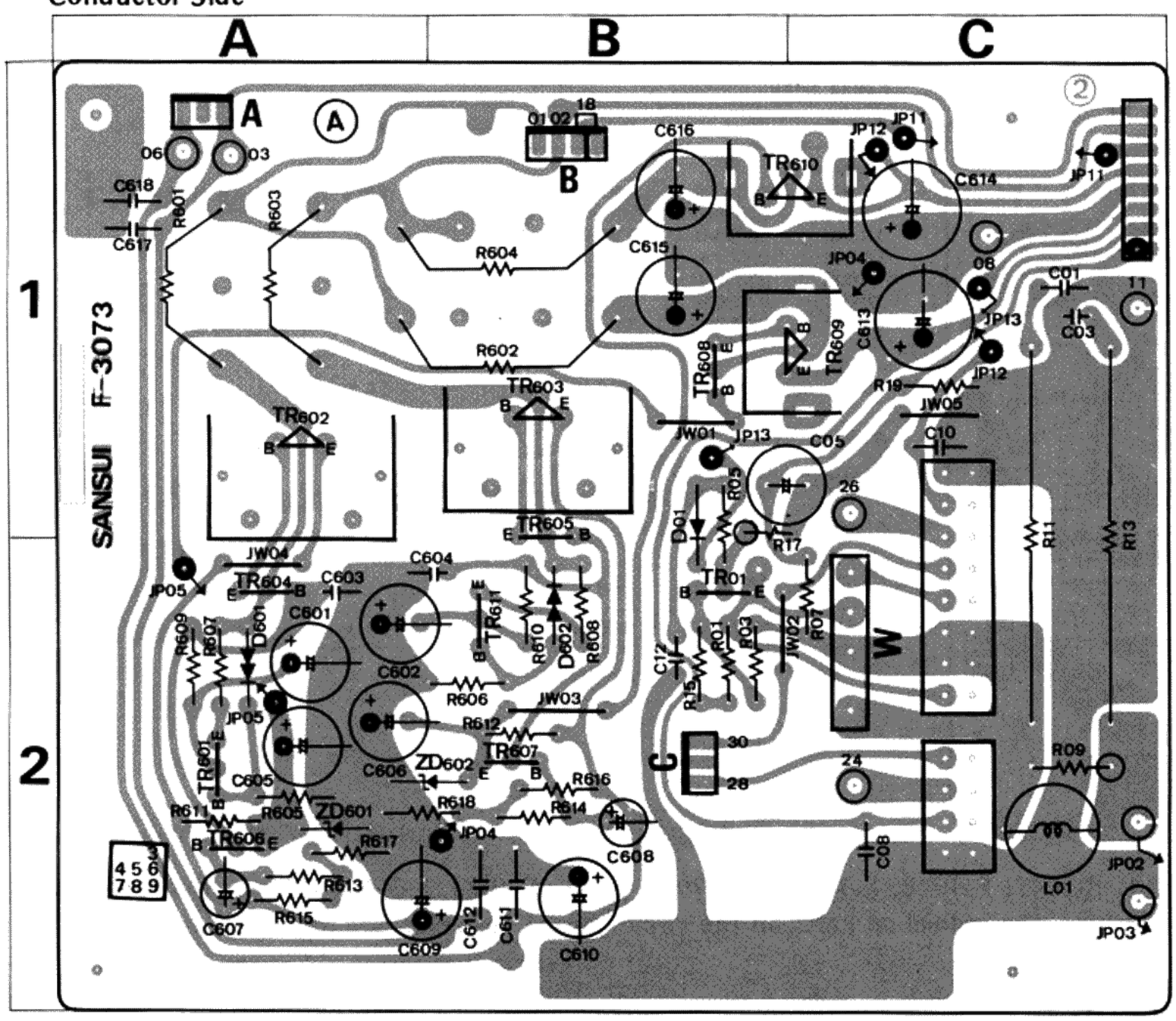

Parts List

Parts No.	Stock No.	Description	Position
•Transistor			
TR01	0301030, 1	2SA939 B, V	2B
TR601	0300470, 1	2SA726 F, G	2A
TR602	0308611, 2	2SD357 D, E	1A
TR603	0303441, 2	2SB527 D, E	1B
TR604	0306070, 1	2SC1313 F, G	2A
TR605	0300470, 1	2SA726 F, G	1, 2B
TR606	0306070, 1	2SC1313 F, G	2A
TR607	0300470, 1	2SA726 F, G	2B
TR608	0305950 ~ 2	2SC945 R, Q, P	1B
TR609	0308611, 2	2SD357 D, E	1B, C
TR610	0303441, 2	2SB527 D, E	1B, C
TR611	0306070, 1	2SC1313 F, G	2B
•Diode			
D 01	0311160	1S2473D	1, 2B
	0311180	1S1588	
•Varistor			
D 601	0340120	VD1212	2A
	0340150	MV-12	
D 602	0340120	VD1212	2B
	0340150	MV-12	
•Zener Diode			
ZD601	0316510	RD24E B	2A
ZD602	0316510	RD24E B	2A, B
R 09	0212229	2.2Ω 2W N.I.R.	2C
R 11	0205100	10Ω 5W N.I.R.	1, 2C
R 13	0205100	10Ω 5W N.I.R.	1, 2C
R 601	0212820	82Ω 2W N.I.R.	1A
R 602	0183271	270Ω 3W Ce.R.	1B
R 603	0212151	150Ω 2W N.I.R.	1A
R 604	0212102	1kΩ 2W N.I.R.	1B
L 01	4290370	1μH Filter Coil	2C

3-12. F-3072 Protector Circuit Board (Stock No. 7572411 = G-9700/971) (Stock No. 7572431 = G-8700DB/871DB)

Conductor Side

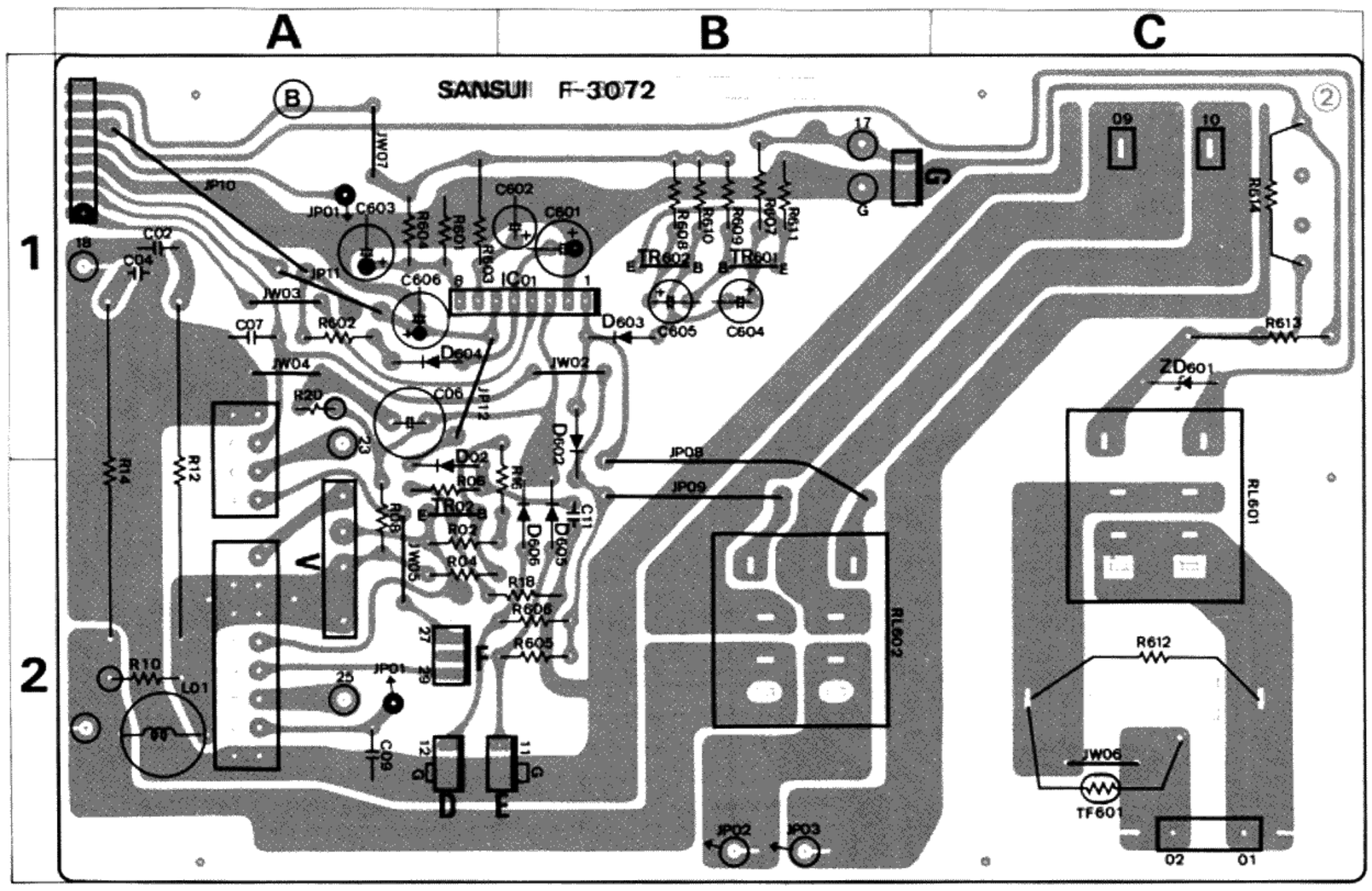

Parts List

Parts No.	Stock No.	Description	Position
•Transistor			
TR02	0301030, 1	2SA939 B, V	2A
TR601	0305950 ~ 2	2SC945 R, Q, P	1B
TR602	0305950 ~ 2	2SC945 R, Q, P	1B
•IC			
IC 01	0360900	HA12002	1A, B
•Diode			
D 02	0311160	1S2473D	2A
	0311180	1S1588	
D 602	0310340	10D1	1, 2B
D 603	0311160	1S2473D	1B
	0311180	1S1588	
D 604	0310340	10D1	1A
D 605	0311160	1S2473D	2B
	0311180	1S1588	
D 606	0311160	1S2473D	2B
	0311180	1S1588	
•Zener Diode			
ZD601	0317170	RD-24F (B)	1C
R 10	0202229	2.2Ω 2W N.I.R.	2A
R 12	0205100	10Ω 5W N.I.R.	1, 2A
R 14	0205100	10Ω 5W N.I.R.	1, 2A
R 603	0211152	1.5kΩ 1W N.I.R.	1A
R 607	0210272	2.7kΩ 1/2W N.I.R.	1B
R 612	0259399	3.9Ω 15W Ce.R.	2C
R 613	0212182	1.8kΩ 2W N.I.R. .... Y	1C
R 614	0212182	1.8kΩ 2W N.I.R. .... Y	1C
R 615	0212182	1.8kΩ 2W N.I.R. X	
R 616	0212182	1.8kΩ 2W N.I.R. X	
L 02	4290370	1μH Filter Coil	
RL601	1150360	Relay, AC	1, 2C
	1150540	Relay, AC	
RL602	1150410	Relay, Speaker	2B

3-13. F-3071 RF Power Supply Circuit Board (Stock No. 7503601 = G-9700/971) (Stock No. 7503631 = G-8700DB/871DB)

Conductor Side

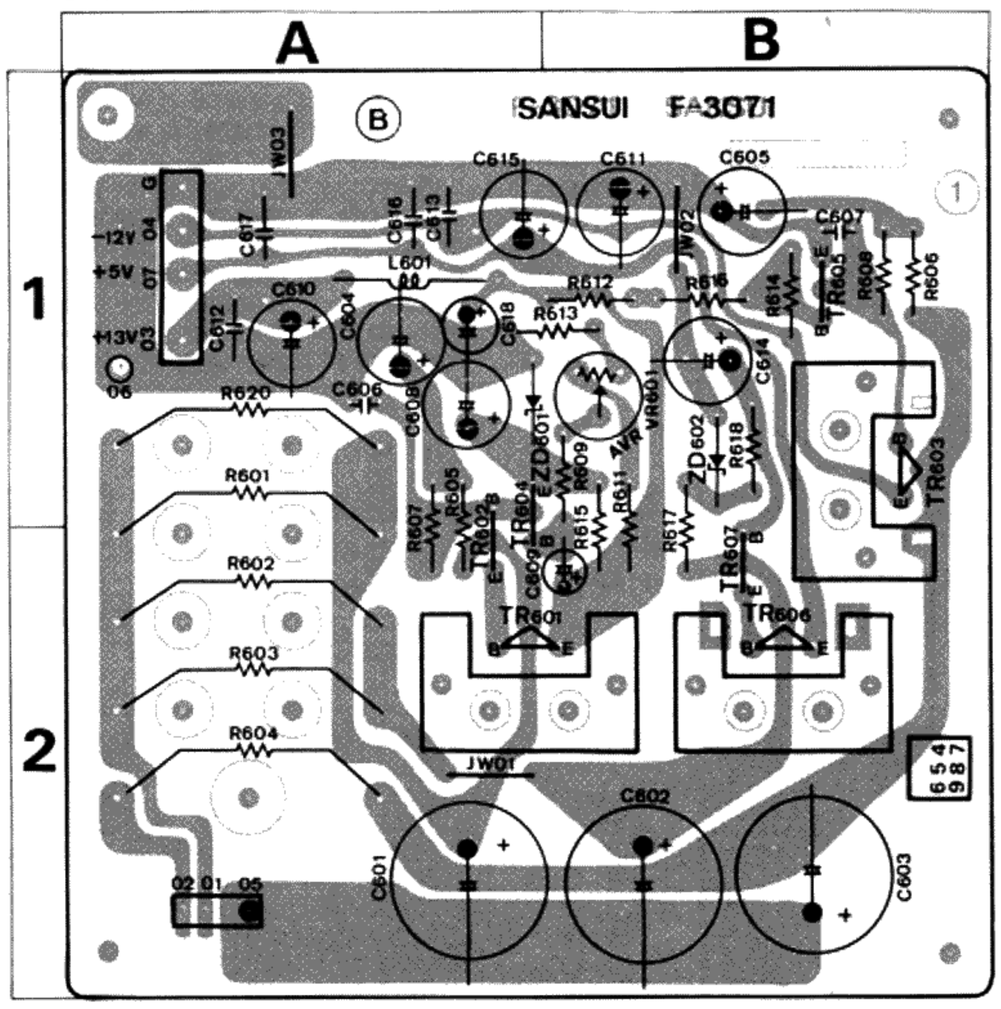

Parts List

Parts No.	Stock No.	Description	Position
•Transistor			
TR601	0308391, 2	2SD313AL D, E	2A
TR602	0305950 ~ 2	2SC945 R, Q, P	2A
TR603	0303441, 2	2SB527 D, E	1B
TR604	0305950 ~ 2	2SC945 R, Q, P	1A
TR605	0300510 ~ 2	2SA733A P, Q, R	1B
TR606	0308611, 2	2SD357 D, E	2B
TR607	0305950 ~ 2	2SC945 R, Q, P	2B
•Zener Diode			
ZD601, 602	0316390	RD6.2E B	1A.1B
R 601	0212330	33Ω 2W N.I.R. X	1A
	0212270	27Ω 2W N.I.R. ..... Y	
R 602	0213221	220Ω 3W N.I.R.	2A
R 604	0213121	120Ω 3W N.I.R.	2A
R 620	0212330	33Ω 2W N.I.R. X	1A
	0212270	27Ω 2W N.I.R. ..... Y	
L 601	4290011	3.5μH	
VR601	1035070	1kΩ (B) Volume AVR	1B

- Note: The circuit boards, F-3114, F-3115, F-3047, F-3048, F-3077, F-3079, F-3081, F-3083, F-3084, F-3085, F-3086, F-3075 & F-3087 are not supplied as the assembled, the individual parts on the circuit board, however, are provided for orders.

3-14. F-3114 L-ch Power Transistor Circuit Board

Conductor Side

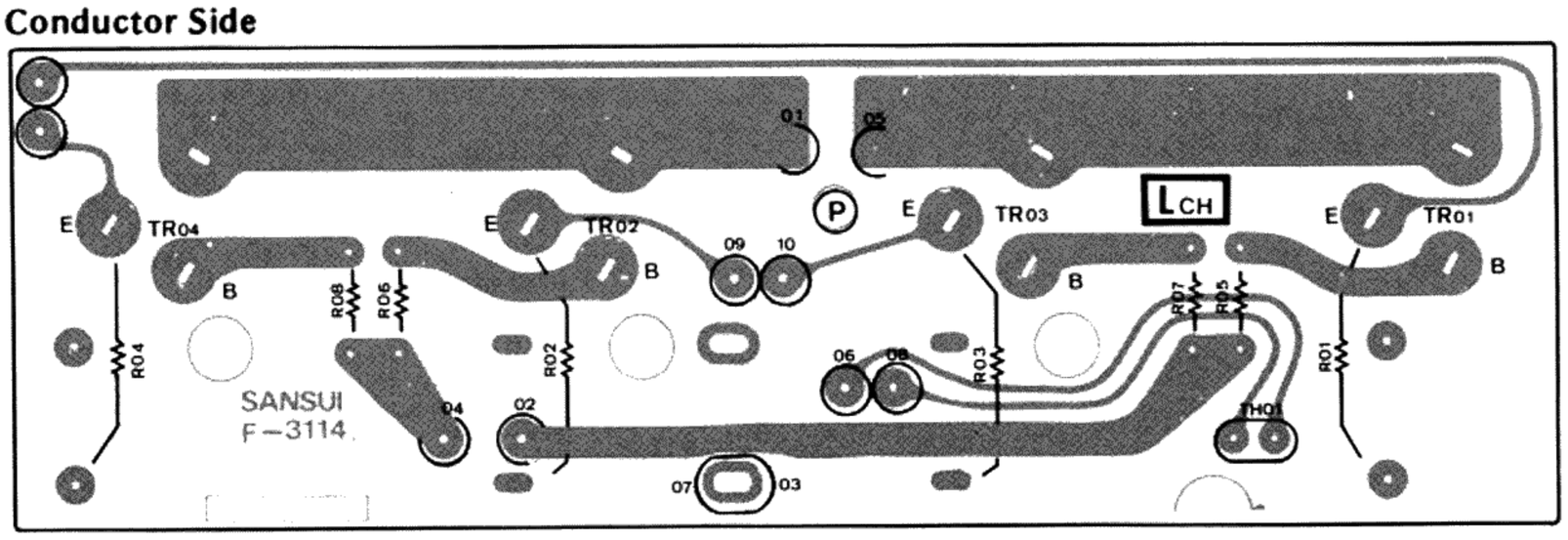

Parts List

Parts No.	Stock No.	Description
•Transistor		
TR01	0306990, 1	2SC2607 O, Y X
	0308630, 1	2SD551 R, O ..... Y
TR02	0301300, 1	2SA1116 O, Y X
	0303460, 1	2SB681 R, O ..... Y
TR03	0306990, 1	2SC2607 O, Y X
	0308630, 1	2SD551 R, O ..... Y
TR04	0301300, 1	2SA1116 O, Y X
	0303460, 1	2SB681 R, O ..... Y
•Thermistor		
TH01	0320130	PTH487A
R 01 ~ 04	0159130	0.33Ω 5W Ce.R.
R 05 ~ 08	0210479	4.7Ω 1/2W N.I.R.

3-15. F-3115 R-ch Power Transistor Circuit Board

Conductor Side

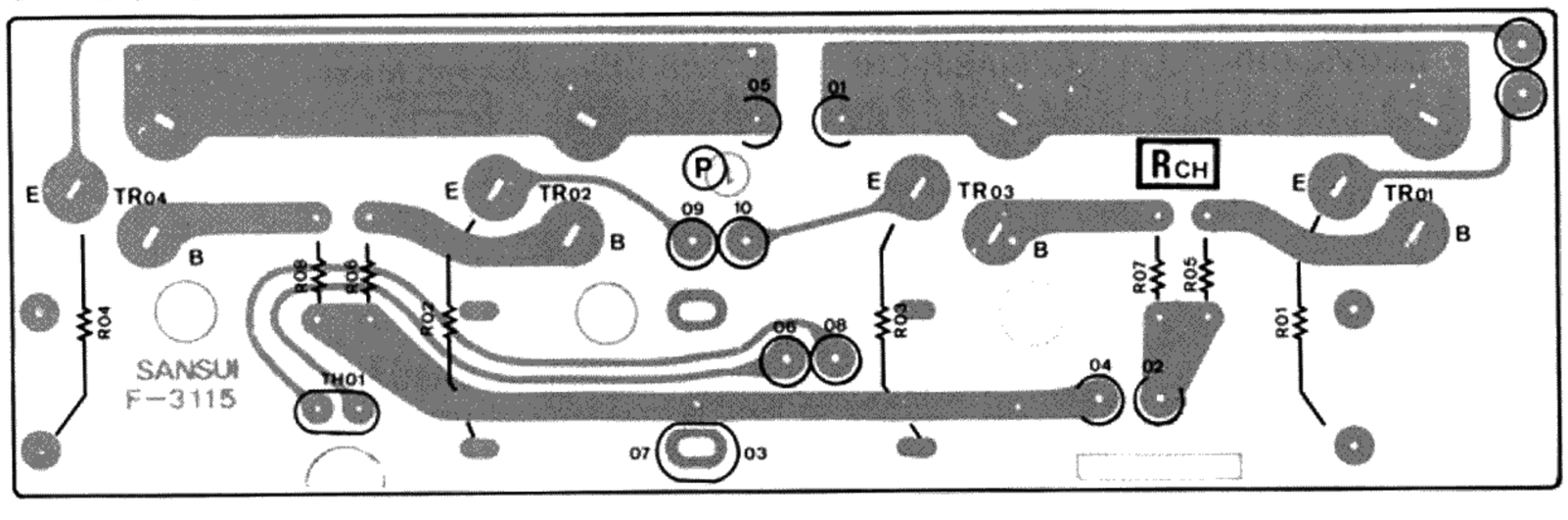

Parts List

Parts No.	Stock No.	Description
•Transistor		
TR01	0306990, 1	2SC2607 O, Y X
	0308630, 1	2SD551 R, O ..... Y
TR02	0301300, 1	2SA1116 O, Y X
	0303460, 1	2SB681 R, O ..... Y
TR03	0306990, 1	2SC2607 O, Y X
	0308630, 1	2SD551 R, O ..... Y
TR04	0301300, 1	2SA1116 O, Y X
	0303460, 1	2SB681 R, O ..... Y
•Thermistor		
TH01	0320130	PTH487A
R 01 ~ 04	0159130	0.33Ω 5W Ce.R.
R 05 ~ 08	0210479	4.7Ω 1/2W N.I.R.

3-16. F-3047 FM Front-end Circuit Board

Parts List

Parts No.	Stock No.	Description
	7510761	FM Front-end ... X
	7510821	FM Front-end ... Y

3-17. F-3048 Bar Antenna Circuit Board

Parts List

Parts No.	Stock No.	Description
C 01	0621682	6800pF 50V P.C.
L 01	4201021	Bar Antenna

3-18. F-3077 Mic Jack Circuit Board

Parts List

Parts No.	Stock No.	Description
VR601	1090270, 1	20kΩ (A) Volume, Mixing
J 601	2430400	Mic Jack

3-19. F-3079 Audio Muting Switch Circuit Board

Parts List

Parts No.	Stock No.	Description
S 02	1132180	Push Switch Ass'y ..... Y FM Mode, DOLBY FM, Audio Muting, MPX Noise Canceler
S 05	1132200	Push Switch Ass'y ..... X FM Auto Noise Filter, FM IF Band, DOLBY FM De-emphasis, FM-Mode, Audio Muting

3-20. F-3081 Master Volume Circuit Board

Parts List

Parts No.	Stock No.	Description
VR01	1011160, 1	150kΩ (B) x 2 Volume

3-21. F-3083 Head Phone Jack Circuit Board

Parts List

Parts No.	Stock No.	Description
R 01, 02	0183221	220Ω 3W Ce.R.
J 01	2430400	Head Phone Jack

3-22. F-3084 Loudness Switch Circuit Board

Parts List

Parts No.	Stock No.	Description
C 01, 02	0620511	510pF 50V P.C.
S 01 ~ 03	1131540	Push Switch Ass'y, Loudness, High Filter Subsonic Filter

3-23. F-3085 Selector Indicator Circuit Board

Parts List

Parts No.	Stock No.	Description
LD01	0319060	SG2-12C (RED)
LD02	0319060	SG2-12C (RED)
LD03	0319060	SG2-12C (RED)
LD04	0319060	SG2-12C (RED)
LD05	0319060	SG2-12C (RED)

3-24. F-3086 Stereo Indicator Circuit Board

Parts List

Parts No.	Stock No.	Description
LD01	0319060	SG2-12C (RED) FM Stereo
LD02	0319050	SG2-13C (GREEN) Quartz Locked

3-25. F-3087 Speaker Indicator Circuit Board

Parts List

Parts No.	Stock No.	Description
LD01	0319050	SG2-13C, Safety Operate (GREEN)
LD02	0319060	SG2-12C, Speaker A (RED)
LD03	0319060	SG2-12C, Speaker B (RED)

3-26. F-3075 Input Terminal Circuit Board

Parts List

Parts No.	Stock No.	Description
	2200600	2P Input Terminal, Phono 1
	2200620	4P Input Terminal, Phono 2, AUX
	2200650	4P Input Terminal, Tape 1, Tape 2

• Abbreviations

C.R.	Carbon Resistor	E.L.	Low Leak Electrolytic Capacitor
S.R.	Solid Resistor	E.B.	Bi-Polar Electrolytic Capacitor
Ce.R.	Cement Resistor	E.BL.	Low Leak Bi-Polar Electrolytic Capacitor
M.R.	Metal Film Resistor	Ta.C.	Tantalum Capacitor
F.R.	Fusing Resistor	F.C.	Film Capacitor
N.I.R.	Non-Inflammable Resistor	M.P.	Metalized Paper Capacitor
C.C.	Ceramic Capacitor	P.C.	Polystyrene Capacitor
C.T.	Ceramic Capacitor, Temperature Compensation	G.C.	Gimmic Capacitor
E.C.	Electrolytic Capacitor		

4 OTHER PARTS

4-1. Top View <G-9700/971>

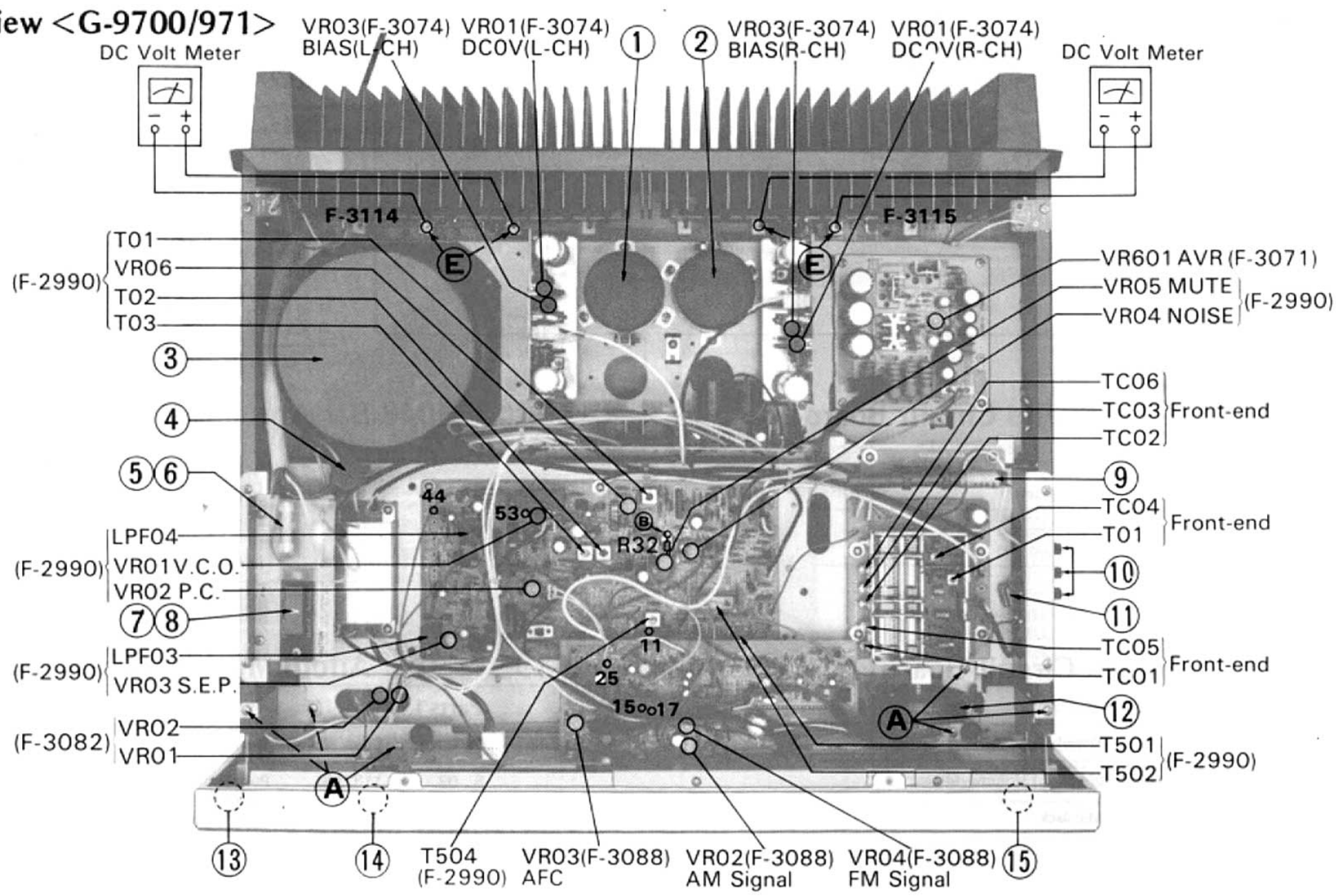

4-2. Bottom View <G-9700/971>

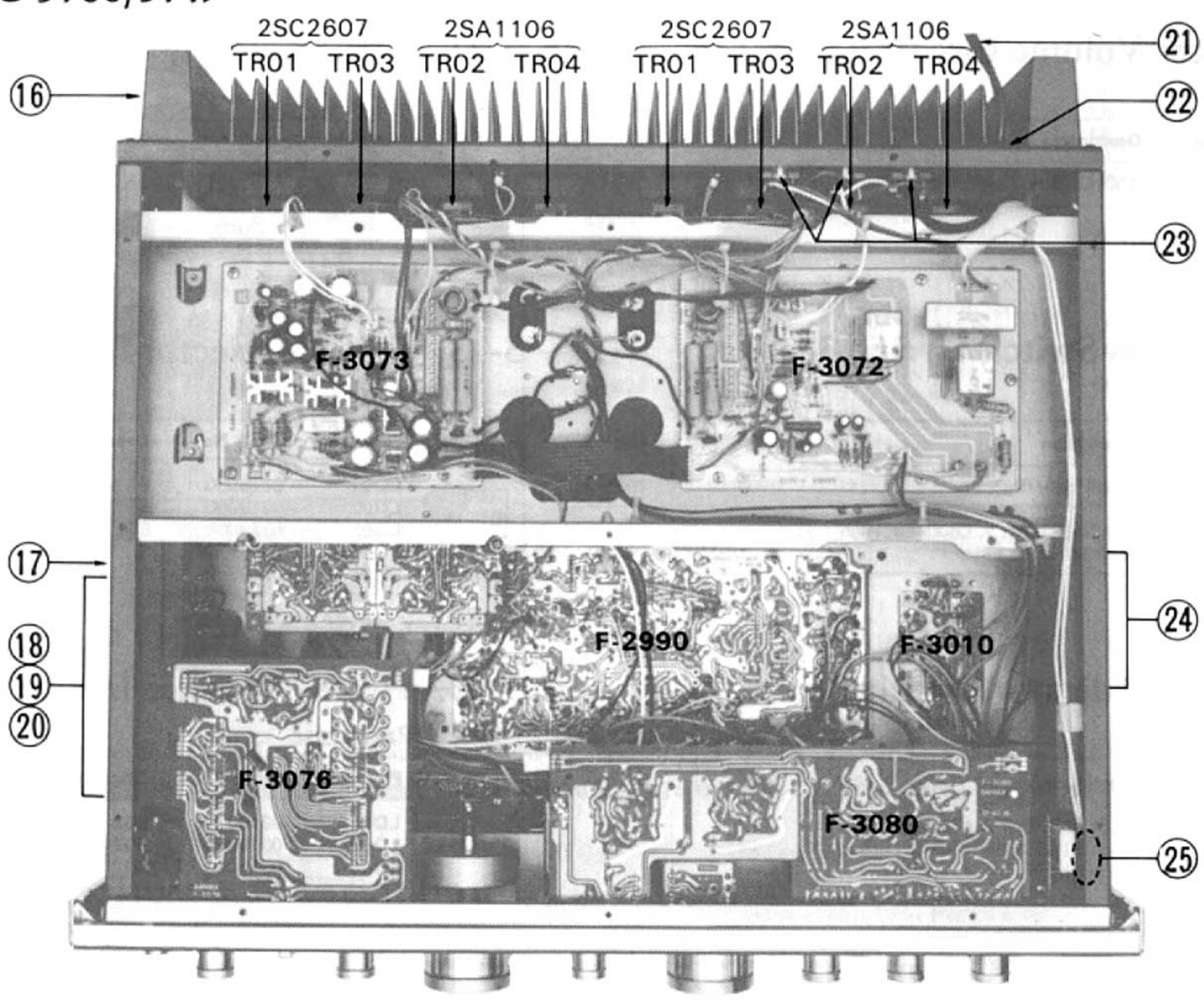

Parts List (Top & Bottom View) <G-9700/971>

No.	Parts No.	Stock No.	Description
1	C 703	0519853	12000μF 100V E.C.
	C 705	0681014	0.047μF 400V F.C.
2	C 704	0519853	12000μF 100V E.C.
	C 706	0681014	0.047μF 400V F.C.
3	T 701	4003180	Power Transformer
4	C 702	0659802	0.0047μF 150V C.C.
5	F 701	0432300	Power Fuse 6A 125V
		0434100	Power Fuse 12A 125V
6		2310250	Power Fuse Holder

No.	Parts No.	Stock No.	Description
7		2410091	Voltage Selector, plug
8		2410830	Voltage Selector, socket
9		4201021	Bar Antenna
10		2210310	Antenna Terminal
11	L 701	4290023, 4	Balun
12		6146741	Pulley
13	PL 701	0400710	Pilot Lamp
14	PL 703	0400660	Pilot Lamp
15	PL 702	0400710	Pilot Lamp

No.	Parts No.	Stock No.	Description
16		5216110	Back Stand
17		2230190	Ground Terminal
18		2200600	2P Input Terminal, phono 1
19		2200620	4P Input Terminal phono2, aux
20		2200650	4P Input Terminal, tape1, tape 2
21		3800490	Power Cord
22		3910490	Strain Relief
23		2450070	AC Outlet
24		2290190	Speaker Terminal
25	C 701	0659801	0.01μF 150V C.C.

4-3. Top View <G-8700DB/871DB>

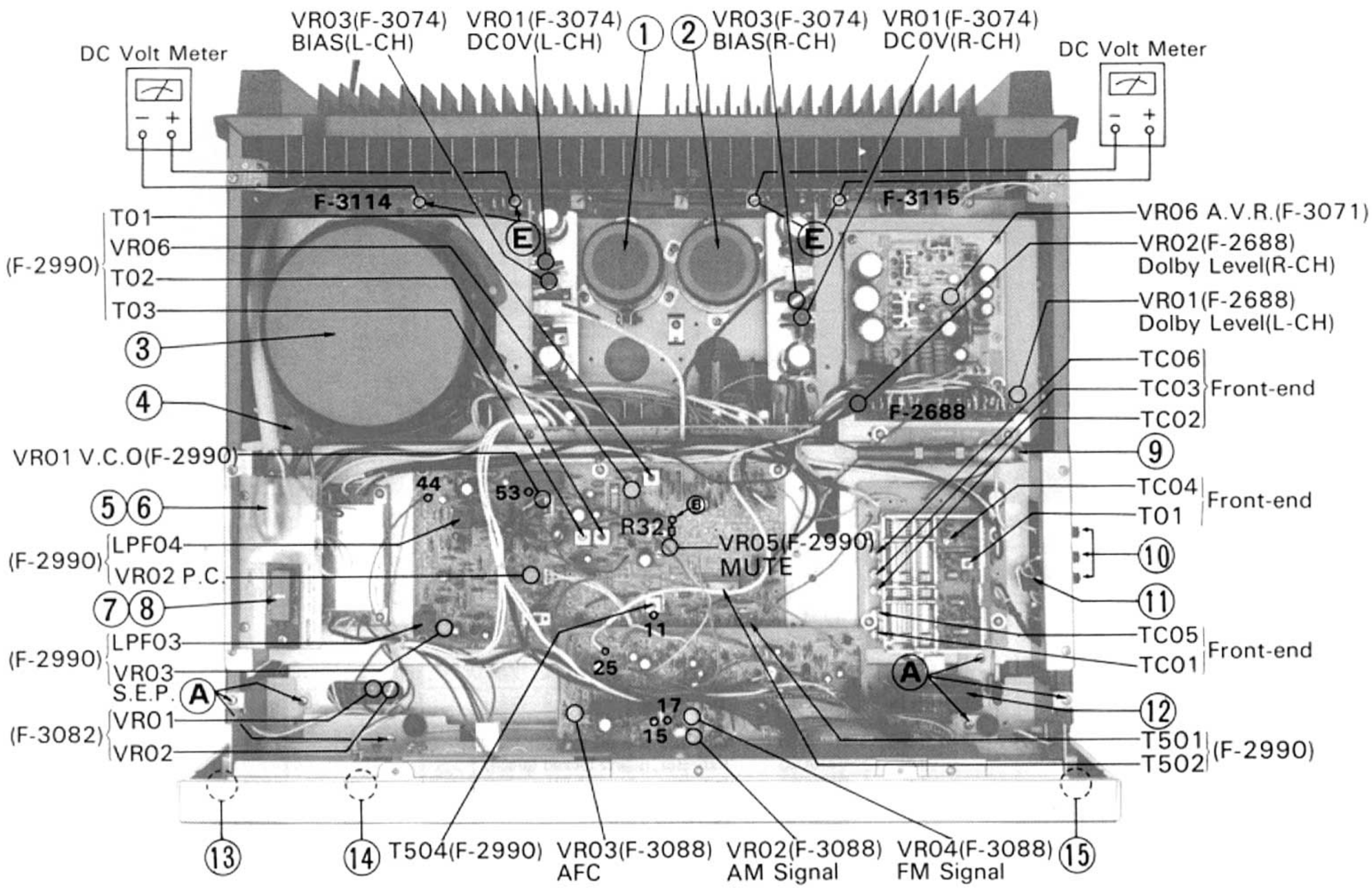

4-4. Bottom View <G-8700DB/871DB>

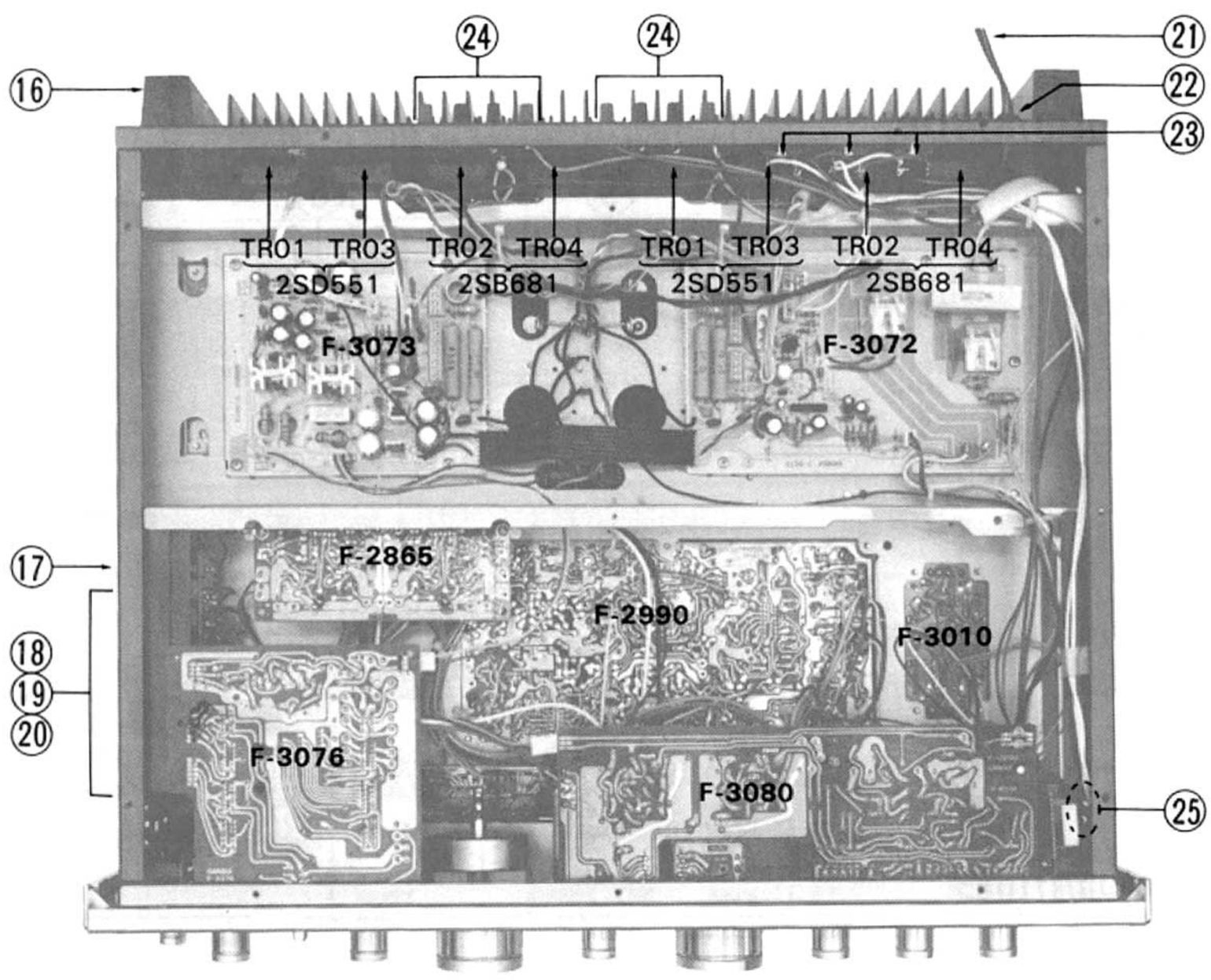

Parts List (Top & Bottom View) <G-8700DB/871DB>

No.	Parts No.	Stock No.	Description
1	C 703	0519853	12000μF 100V E.C.
	C 705	0681014	0.047μF 400V F.C.
2	C 704	0519853	12000μF 100V E.C.
	C 706	0681014	0.047μF 400V F.C.
3	T 701	4003170	Power Transformer
4	C 702	0659802	0.0047μF 150V C.C.
5	F 701	0432300	Fuse 6A 125V
		0434100	Fuse 12A 125V
6		2310250	1P Fuse Holder
7		2410091	Voltage Selector, Plug
8		2410830	Voltage Selector, Socket
9		4201021	Bar Antenna
10		2210310	Antenna Terminal
11	L 701	4290023, 4	Balun
12		6146741	Pulley
13	PL 701	0400710	Pilot Lamp
14	PL 703	0400660	Pilot Lamp
15	PL 702	0400710	Pilot Lamp
16		5216100	Back Stand
17		2230190	Ground Terminal
18		2200600	2P Input Terminal, Phono 1
19		2200620	4P Input Terminal, Phono 2, AUX
20		2200650	4P Input Terminal, Tape 1, Tape 2
21		3800470	Power Cord
22		3910600	Strain Relief
23		2450070	AC Outlet
24		2210410	4P Speaker Terminal
25	C 701	0659801	0.01μF 150V C.C.

4-5. Front View <G-9700/971>

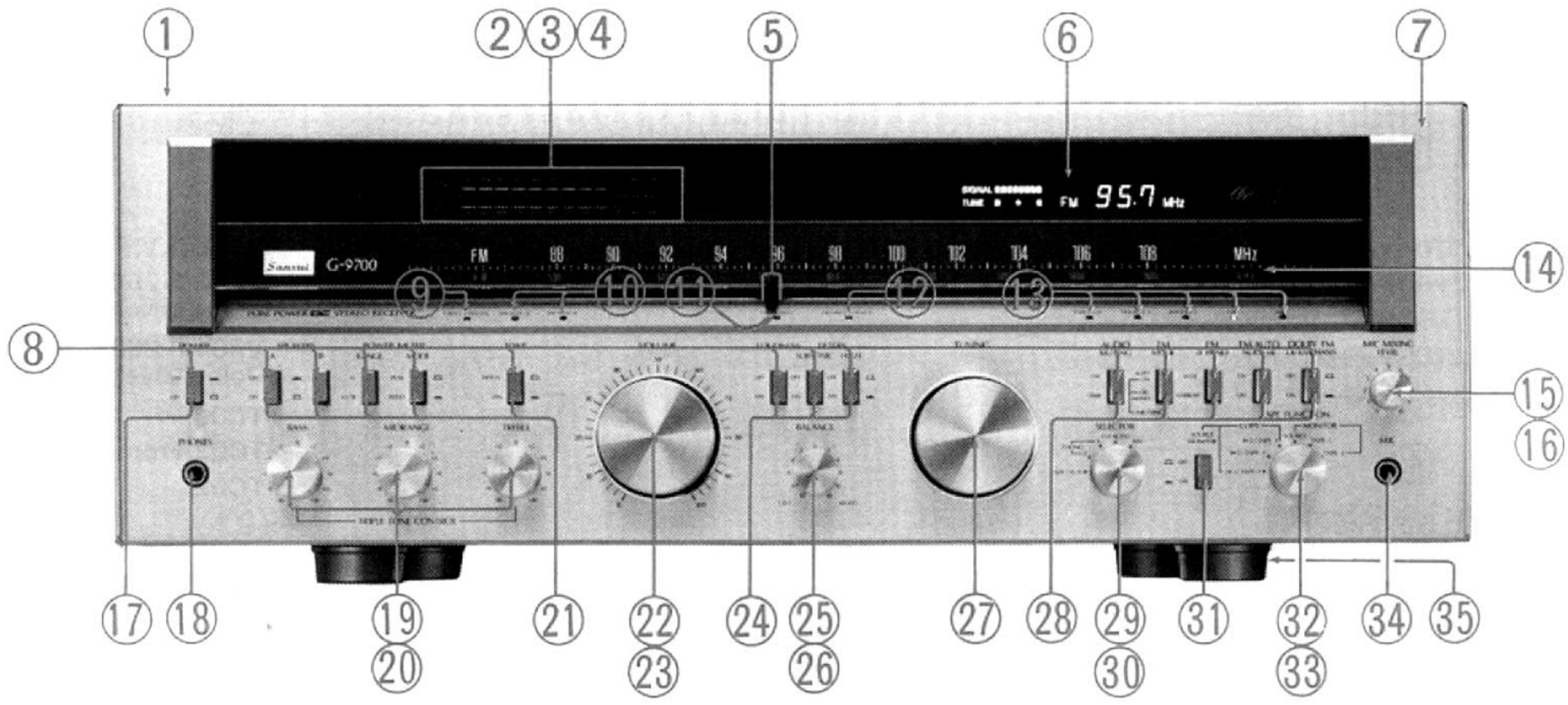

Parts List (Front View) <G-9700/971>

Parts No.	Stock No.	Description
1	5727200	Wood Bonnet
2	5446460	Smoked Plate
3	5426530	LED Guide Plate
4	0319420	LED Ass'y
5	7116101	Dial Pointer
6	0030060	Display Unit
7	7008480	Front Panel Ass'y <G-9700>
	7008670	Front Panel Ass'y <G-971>
	5048430	Masking Plate
	5396781	Knob Guide <G-9700>
	5396771	Knob Guide <G-971>
	5446490	Front Glass
	5458040	Dial Flame
8	5319491	Push Switch Knob
9	0319050	Indicator, safety operate (green)
10	0319060	Indicator, speaker A, B, (red)

Parts No.	Stock No.	Description
11	0319060	Indicator, FM stereo (red)
12	0319050	Indicator, quartz locked (green)
13	0319060	Indicator, selector (red)
14	5408760	Dial Glass <G-9700>
	5408770	Dial Glass <G-971>
15	5319450	Knob, mic mixing
16	1090270, 1	Mic, Mixing Volume
17	1131650	Power Switch
18	2430400	Head Phone Jack
19	5319470	Knob, bass, midrange, treble
20	1015200, 1	Bass, Midrange, Treble Volume, 100kΩ (B) x 2
21	1132190	Push Switch Ass'y, tone, speakers A, B, power meter, meter range
22	5319440	Knob, master
23	1011160, 1	Master Volume, 150kΩ (B) x 2

Parts No.	Stock No.	Description
24	1131540	Push Switch Ass'y, loudness, high filter, subsonic filter
25	5319460	Knob, balance
26	1015340, 1	Balance Volume, 250kΩ (MN) x 2
27	5319430	Knob, tuning
28	1132200	Push Switch Ass'y, FM auto noise filter, IF band, dolby FM mode-FM muting, audio muting
29	5319470	Knob, selector
30	1190750	Selector Switch
31	1131550	Source Monitor Switch
32	5319470	Knob, tape monitor
33	1190740	Tape Monitor Switch
34	2430400	Mic Jack
35	5517050	Leg

4-6. Front View <G-8700DB/871DB>

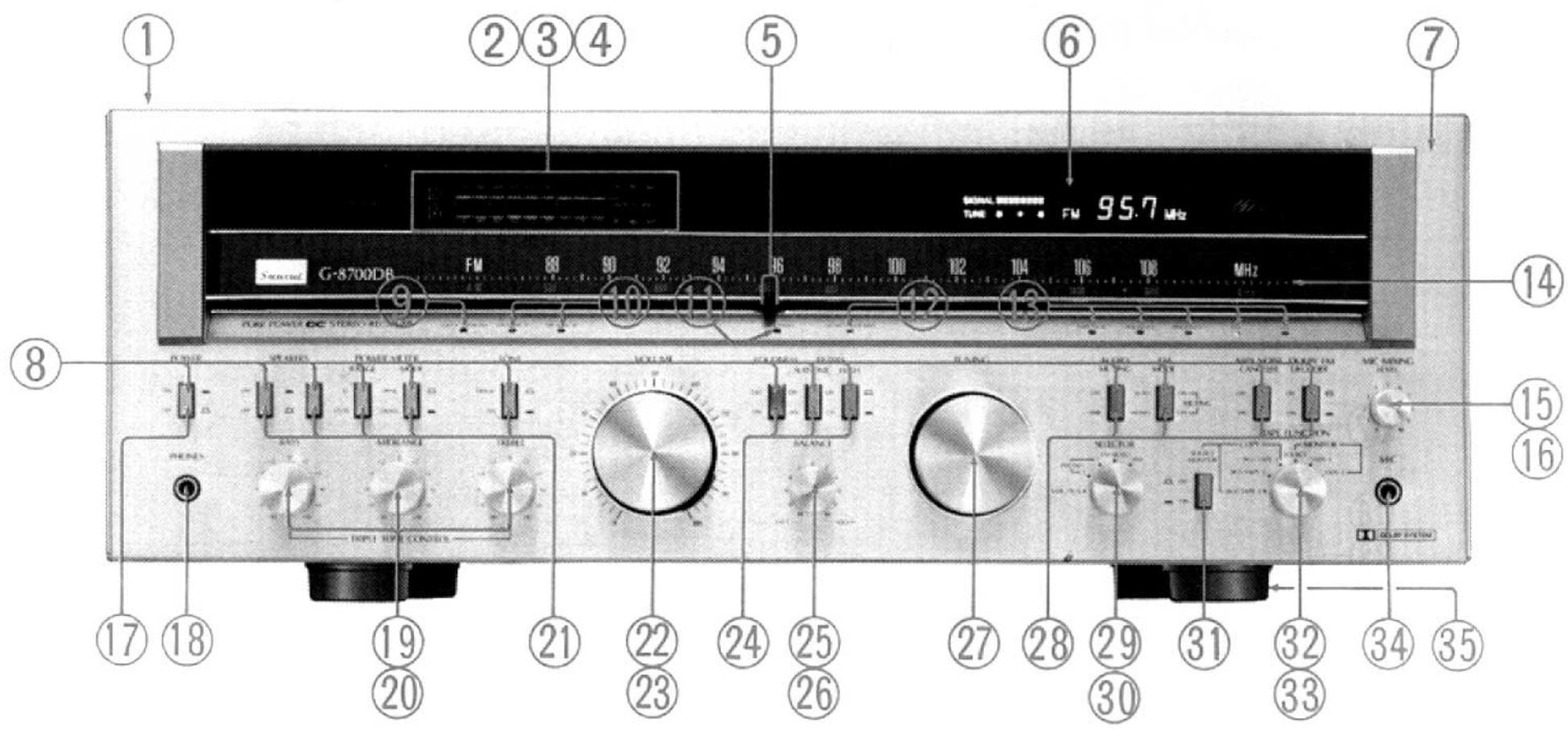

Parts List (Front View) <G-8700DB/871DB>

Parts No.	Stock No.	Description
1	5727210	Wood Bonnet
2	5446460	Smoked Plate
3	5426540	LED Guide Plate
4	0319420	LED Ass'y
5	7116101	Dial Pointer
6	0030060	Fluorescent Display Unit
7	7008490	Front Panel Ass'y <G-8700DB>
	7008680	Front Panel Ass'y <G-871DB>
	5048430	Masking Plate
	5396781	Knob Guide <G-8700DB>
	5396771	Knob Guide <G-871DB>
	5446490	Front Glass
	5458040	Dial Frame
8	5319491	Push Knob
9	0319050	Indicator, Safety Operate (Green)
10	0319060	Indicator, Speakers A, B (Red)

Parts No.	Stock No.	Description
11	0319060	Indicator, FM Stereo (Red)
12	0319050	Indicator, Quartz Locked (Green)
13	0319060	Indicator, selector (Red)
14	5408780	Dial Glass <G-8700DB>
	5408790	Dial Glass <G-871DB>
15	5319450	Knob, Mic Mixing
16	1090270, 1	Mic Mixing Volume 20kΩ (A)
17	1131650	Power Switch
18	2430400	Headphone Jack
19	5319470	Knob, Bass, Midrange, Treble 100kΩ (B) x 2
20	1015200, 1	Bass, Midrange, Treble Volume 100kΩ (B) x 2
21	1132190	Push Switch Ass'y, Tone, Speakers A, B, Power meter
22	5319440	Knob, Master Volume

Parts No.	Stock No.	Description	Position
23	1011160, 1	Master Volume 150kΩ (B) x 2	
24	1131540	Push Switch Ass'y, Loudness, High Filter, Subsonic Filter	
25	5319460	Knob, Balance	
26	1015340, 1	Balance Volume 250kΩ (MN) x 2	
27	5319430	Knob, Tuning	
28	1132180	Push Switch Ass'y, Audio Muting, FM Mode, MPX Noise Canceler DOLBY FM	
29	5319470	Knob, Selector	
30	1190750	Selector Switch	
31	1131550	Source Monitor Switch	
32	5319470	Knob, Tape Function	
33	1190740	Tape Function on Switch	
34	2430400	Mic Jack	
35	5517050	Leg	

G-9700/971
G-8700DB/871DB

* Design and specifications subject to change without notice for improvement.
* La présentation et les spécifications sont susceptibles d'être modifiées sans préavis par suites d'améliorations éventuelles.
* Änderungen, die dem technischen Fortschritt dienen, bleiben vorbehalten.

5. SCHEMATIC DIAGRAM

5-1. Power Supply Section <G-9700/971>

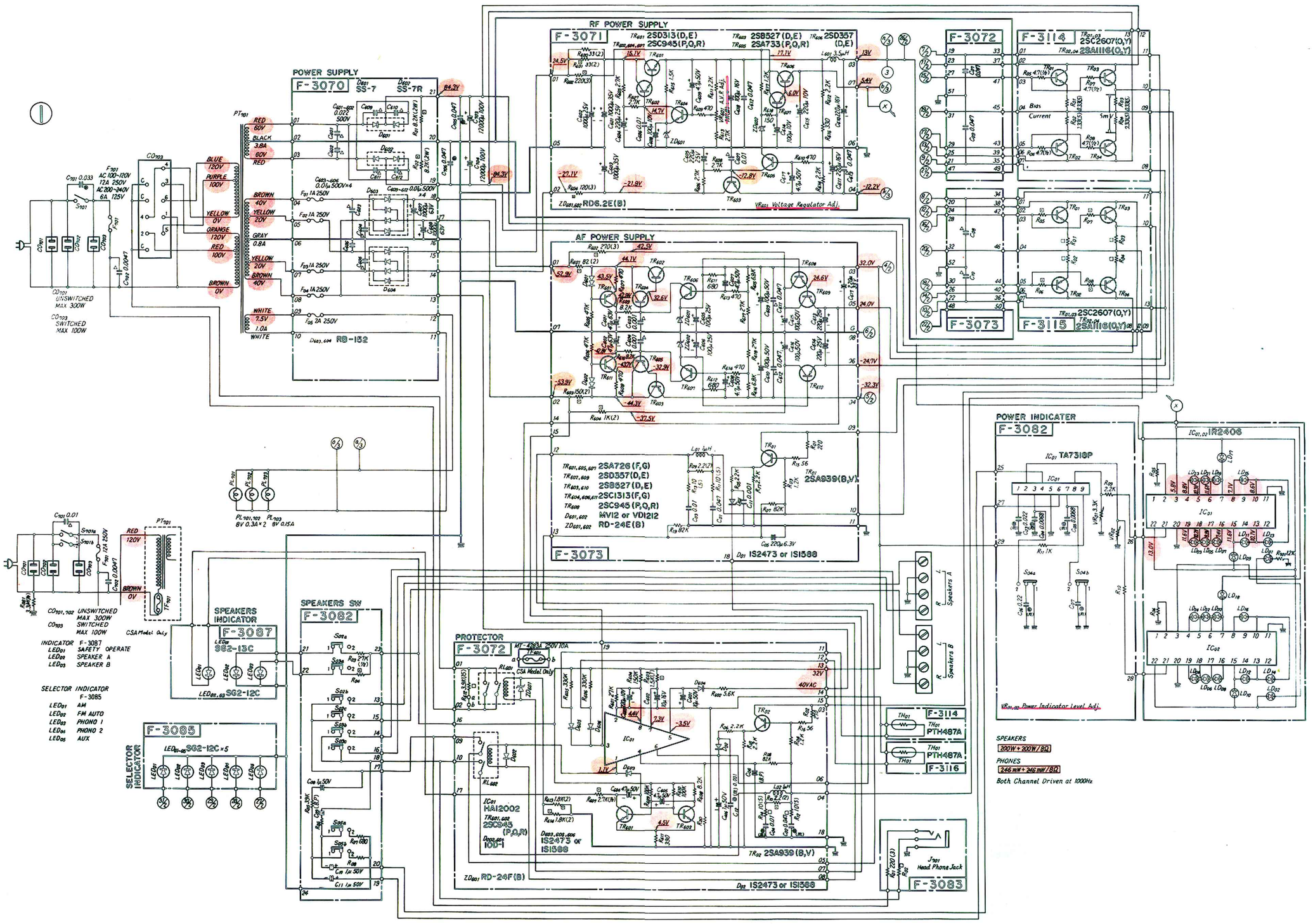

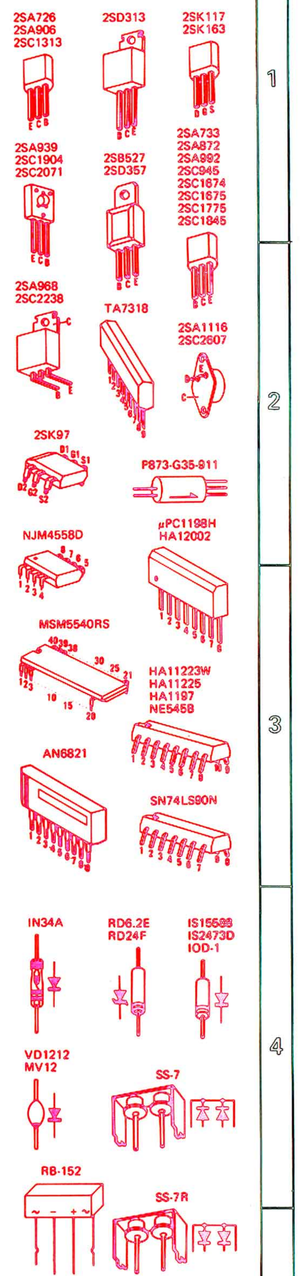

• Design and specifications subject to change without notice for improvement.
• La présentation et les spécifications sont susceptibles d'être modifiées sans préavis par suites d'améliorations éventuelles.
• Änderungen, die dem technischen Fortschritt dienen, bleiben vorbehalten.

5-2. Audio Section <G-9700/971>

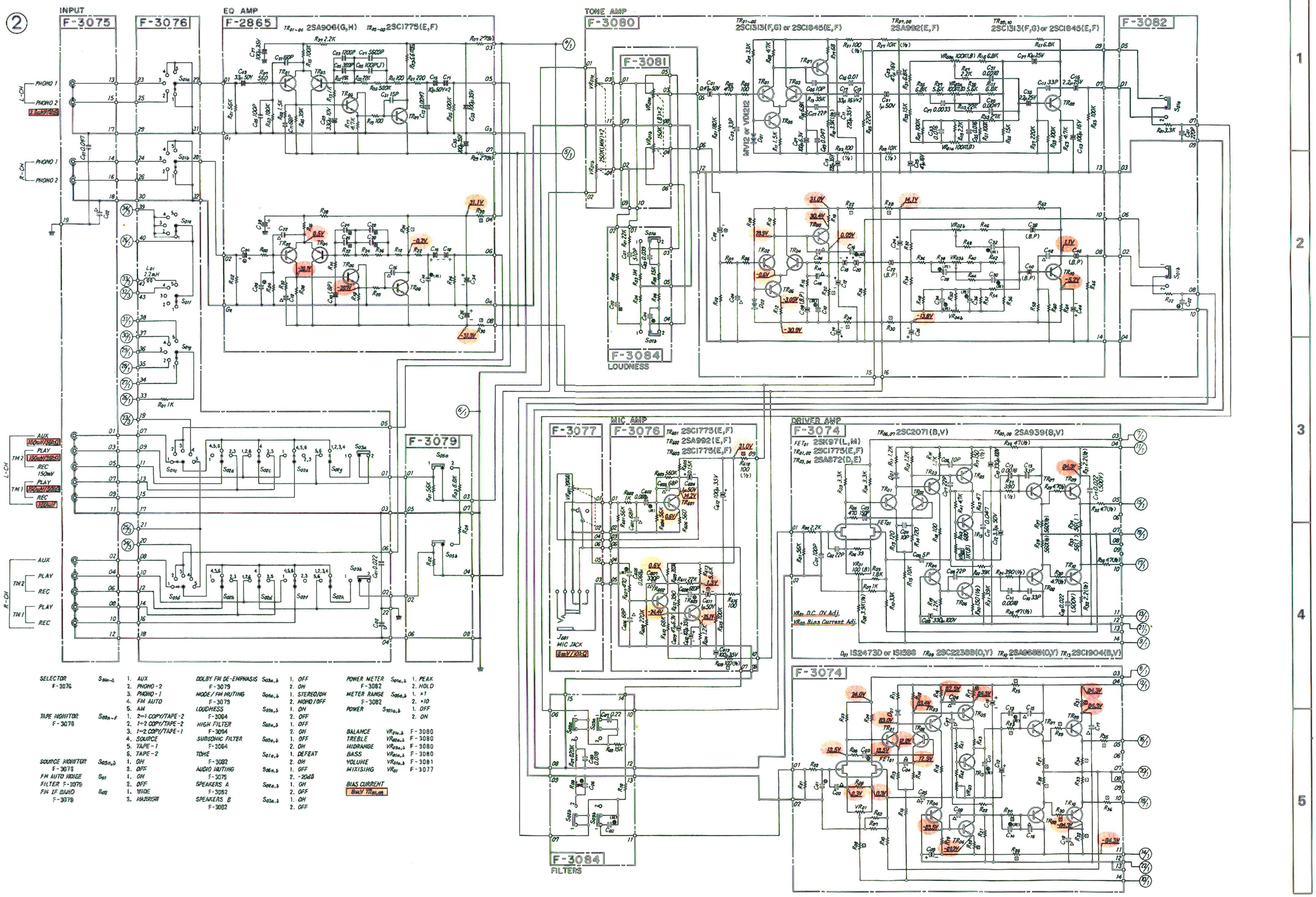

SELECTOR F-3076	S_{01a-b}	1. AUX 2. PHONO-2 3. PHONO-1 4. FM AUTO 5. AM
TAPE MONITOR F-3076	S_{02a-f}	1. 2→1 COPY/TAPE-2 2. 1→2 COPY/TAPE-2 3. 1→2 COPY/TAPE-1 4. SOURCE 5. TAPE-1 6. TAPE-2
SOURCE MONITOR F-3076	$S_{03a,b}$	1. ON 2. OFF
FM AUTO MONO FILTER F-3076	S_{04}	1. ON 2. OFF
FM IF BAND F-3076	S_{05}	1. WIDE 2. NARROW
DOLBY FM DE-EMPHASIS F-3079	$S_{03a,b}$	1. OFF 2. ON
MODE/FM MUTING F-3079	$S_{06a,b}$	1. STEREO/ON 2. MONO/OFF
LOUDNESS F-3084	$S_{01a,b}$	1. ON 2. OFF
HIGH FILTER F-3094	$S_{02a,b}$	1. OFF 2. ON
SUBSONIC FILTER F-3084	$S_{03a,b}$	1. OFF 2. ON
TONE F-3082	$S_{01a,b}$	1. DEFEAT 2. ON
AUDIO MUTING F-3079	$S_{05a,b}$	1. OFF 2. -20dB
SPEAKERS A F-3082	$S_{02a,b}$	1. ON 2. OFF
SPEAKERS B F-3082	$S_{03a,b}$	1. ON 2. OFF
POWER METER F-3082	$S_{04a,b}$	1. PEAK 2. HOLD
METER RANGE F-3082	$S_{05a,b}$	1. ×1 2. ×10
POWER	$S_{101a,b}$	1. OFF 2. ON
BALANCE	$VR_{01a,b}$	F-3080
TREBLE	$VR_{02a,b}$	F-3080
MIDRANGE	$VR_{03a,b}$	F-3080
BASS	$VR_{04a,b}$	F-3080
VOLUME	$VR_{05a,b}$	F-3081
MIXISING	VR_{01}	F-3077

BIAS CURRENT
8mV $TR_{07,08}$

G-9700/971
G-8700DB/871DB

• Design and specifications subject to change without notice for improvement.
• La présentation et les spécifications sont susceptibles d'être modifiées sans préavis par suites d'améliorations éventuelles.
• Änderungen, die dem technischen Fortschritt dienen, bleiben vorbehalten.

5-3. Tuner Section <G-9700/971>

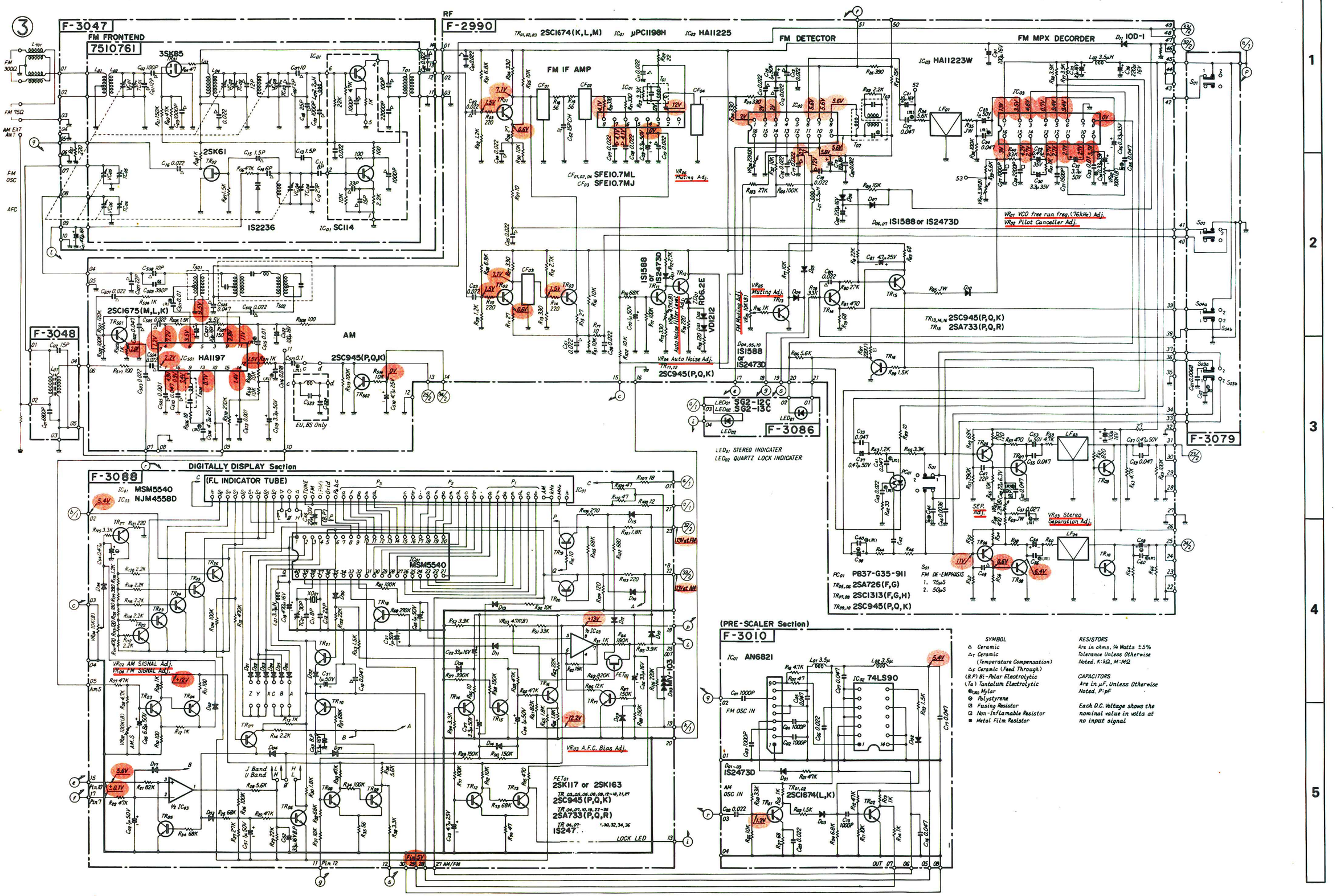

G-9700/971
G-8700DB/871DB

- Design and specifications subject to change without notice for improvement.
- La présentation et les spécifications sont susceptibles d'éter modifiées sans préavis par suites d'améliorations éventuelles.
- Änderungen, die dem technischen Fortschritt dienen, bleiben vorbehalten.

5-4. Power Supply Section <G-8700DB/871DB>

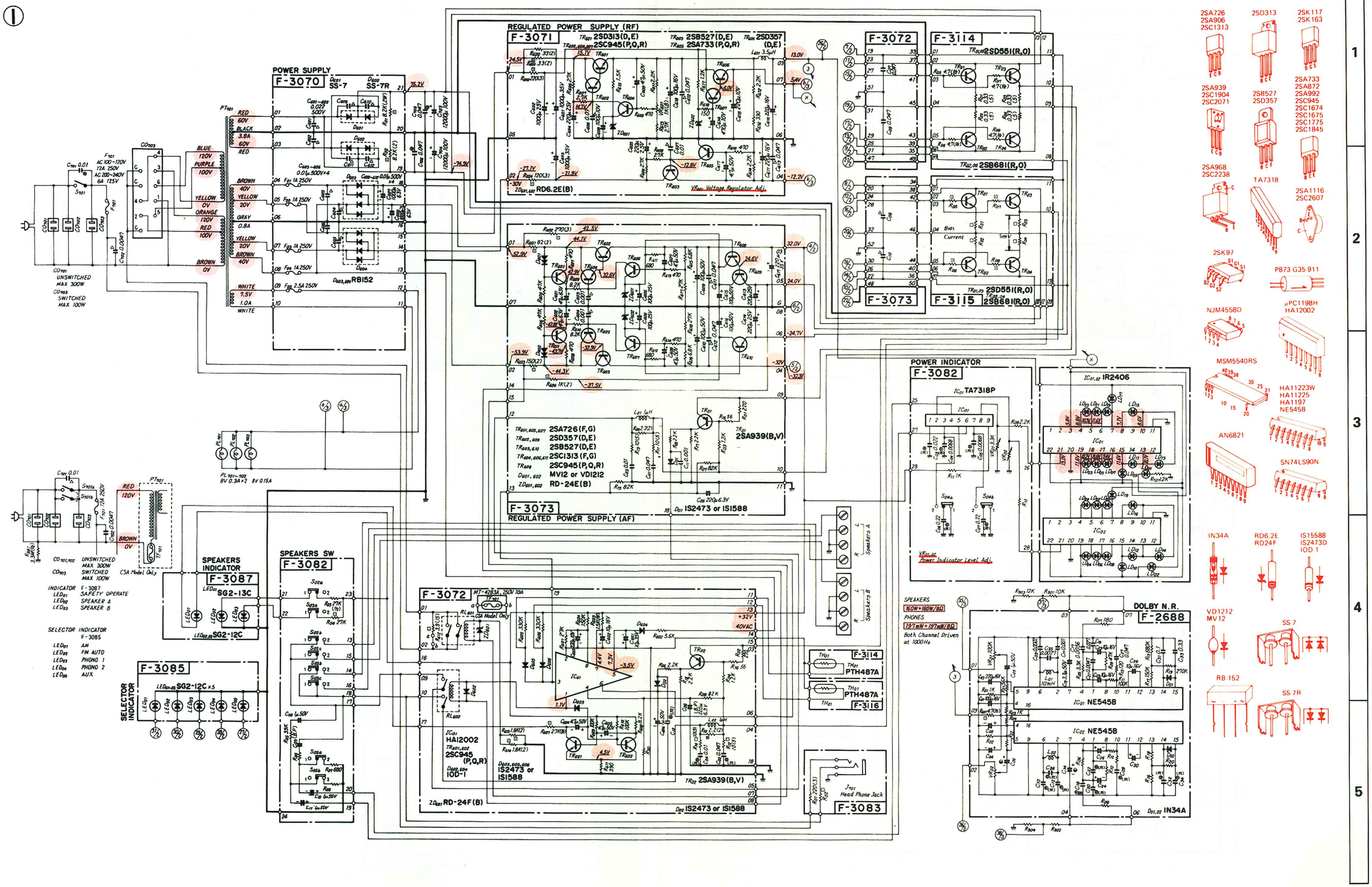

• Design and specifications subject to change without notice for improvement.
• La présentation et les spécifications sont susceptibles d'être modifiées sans préavis par suites d'améliorations éventuelles.
• Änderungen, die dem technischen Fortschritt dienen, bleiben vorbehalten.

5-5. Audio Section <G-8700DB/871DB>

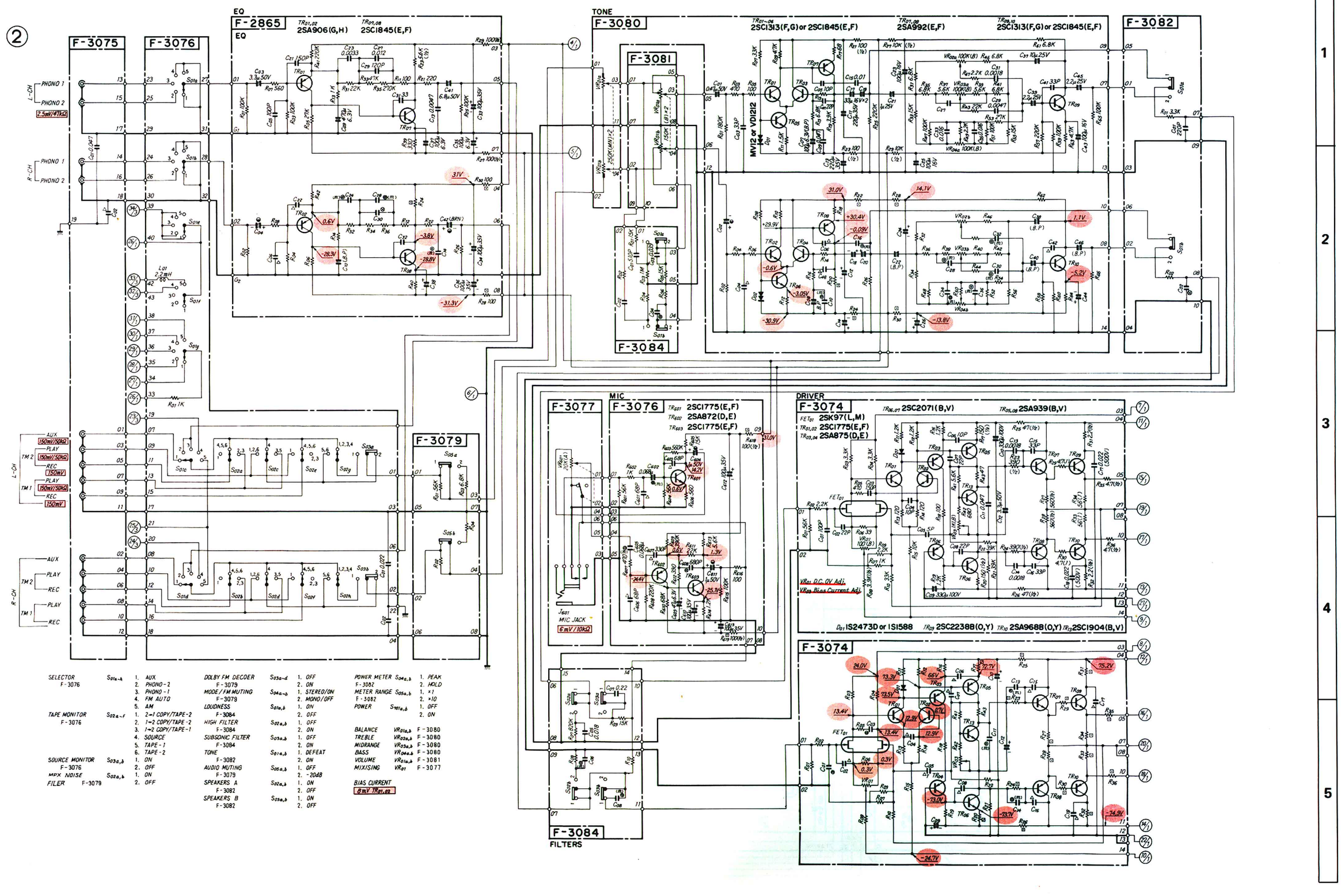

• Design and specifications subject to change without notice for improvement.
• La présentation et les spécifications sont susceptibles d'être modifiées sans préavis par suites d'améliorations éventuelles.
• Änderungen, die dem technischen Fortschritt dienen, bleiben vorbehalten.

5-6. Tuner Section <G-8700DB/871DB>

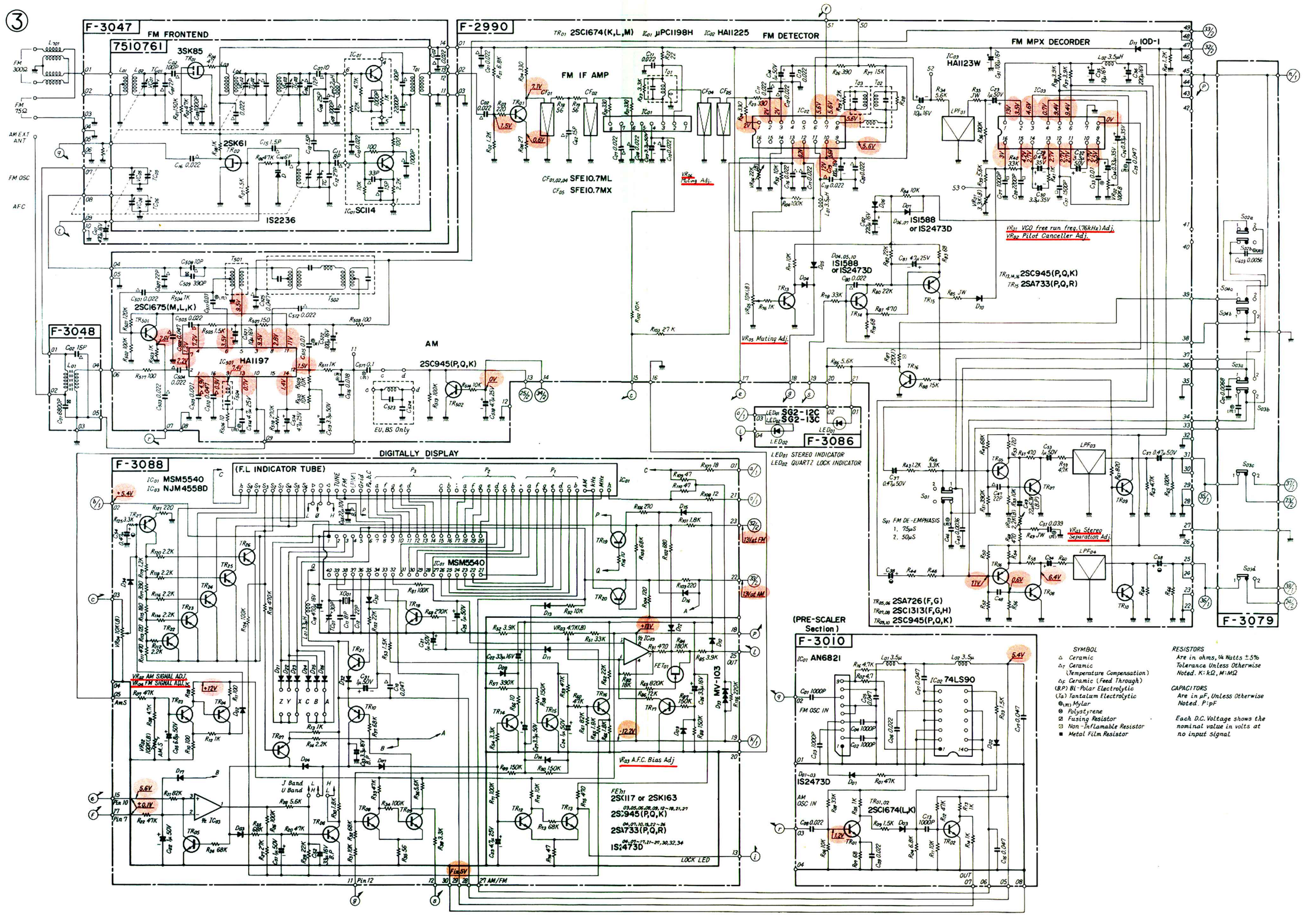

6. THREADING OF DIAL CORD

- If a dial cord is cut off or slips, replace it by following procedures. As this unit uses 0.5 mmφ cord, please replace it with the same type certainly.
- The length of dial cord is approximately 200 cm (78.7 inch).

1. Threading of Dial Cord

Thread the dial cord in numerical order from ① to ⑬ as Fig. 1.

- Open the variable capacitor completely.

* Dial Cord (0.5 mmφ) . . . . . (Stock No. 6036050)

2. Attachment of Dial Pointer

1. After installing the dial string, turn on the power switch. If the digital display is in the "FM Reception" state,turn the tuning knob until the digital display indicates 98.0 MHz. Then, fix the pointer to the dial string, after setting the pointer to the 98.0 MHz value of the scale.
2. After attaching Dial pointer, confirm Dial pointer moves from 88 MHz to 108 MHz to turn the tuning knob.

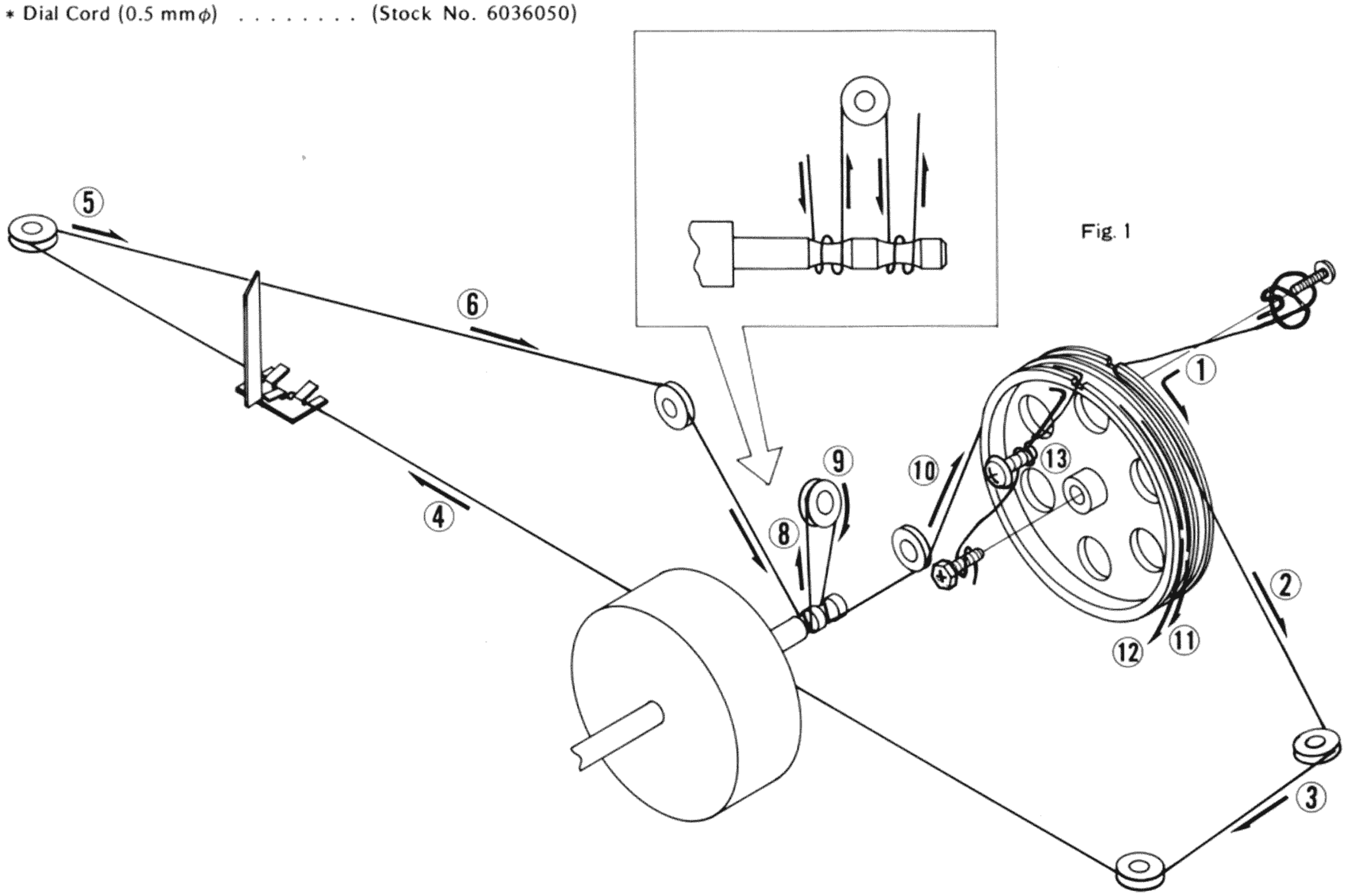

Fig. 1

7. MAIN PARTS REPLACEMENT

7-1. Master Volume Replacement

1) Puck out, the volume knob.
2) Loosen the nut fastning the volume to chassis.
3) Take off the volume from F-3081, Circuit Board to remove solder.

7-2. Power Transistor Replacement

1) Take off the radiation fin to loosen 8 fixing screws on the rear panel.
2) Loosen 2 screws fixing a power transistor to heat sink.

7-3. Front Panel Replacement

1) Remove bonnet and bottom plate.
2) Loosen 2 flat countersunk head screws fixing the front panel.
3) Loosen 3 nuts fixing the front panel after pluck out every knob except push knobs.

7-4. Replacement of LED Indication Circuit Board for Selector, Speaker, Stereo and Quartz Lock

1) Remove the front panel following to procedures above.
2) Lift up the tuning mechanism slightly to remove 6 screws A (Shown in Page 13 & 14, Top View)
3) Remove 2 T-rivets fixing LED Indication Circuit Board.

8. PACKING LIST

Parts No.	Stock No.	Description
1	9116741	Vinyl Cover
2	9028120	Styrofoam Packing, upper (R)
3	9028130	Styrofoam Packing, upper (L)
4	9028110	Styrofoam Packing, lower
5	9028160	Styrofoam Packing
6	9056030	Carton Case <G-9700>
	9056040	Carton Case <G-971>
	9056050	Carton Case <G-8700DB>
	9056060	Carton Case <G-871DB>

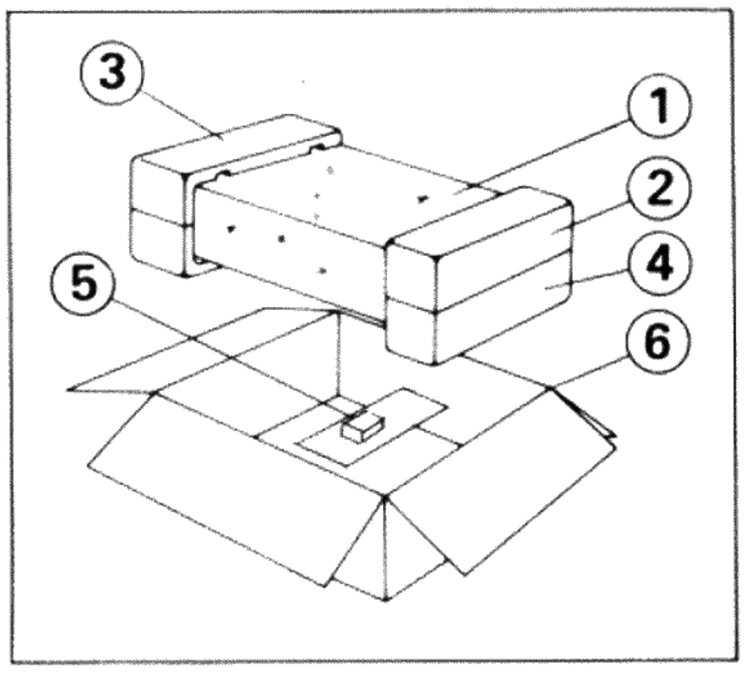

9. ACCESSORY PARTS LIST

Stock No.	Description
9205000	Operating Instructions <G-9700>
9205290	Operating Instructions <G-971>
9205010	Operating Instructions <G-8700DB>
9205300	Operating Instructions <G-871DB>
9238270	Schematic Diagram <G-9700>
9238280	Schematic Diagram <G-971>
9238290	Schematic Diagram <G-8700DB>
9238300	Schematic Diagram <G-871DB>

Sansui

SANSUI ELECTRONICS CORPORATION: 1250 Valley Brook Ave. Lyndhurst, N.J. 07071 U.S.A.
333 West Alondra Blvd. Gardena, California 90247 U.S.A.
3036 Koapaka St. Honolulu, Hawaii 96819 U.S.A.
SANSUI AUDIO EUROPE N.V.: North Trade Bldg (9th floor) Noorderlaan 133-Bus 1,2030 Antwerp, Belgium
SNASUI AUDIO EUROPE S.A.: Arabella center, 6 Frankfurt AM Main, Lyoner Strasse 44-48, West Germany
SANSUI ELECTRIC COMPANY LTD.: 14-1, Izumi 2-chome, Suginamiku, Tokyo 168 Japan PHONE: (03) 323-1111/TELEX: 232-2076

SM139

Printed in Japan (794330M)